ELEC-E3530

Integrated Analog Systems L3
SC-biquads

General SC biquad

Synthesis:

A:
1) Write a s-plane transfer function
2) Make a signal flow graph (SFG)
3) Create a RC-active equivalent topology
4) Replace the resistors with switched capacitors

B:
1) Write a s-plane transfer function
2) Use the s→z transformation to get the z-plane transfer function
3) Make the SFG for the z-plane transfer function
4) Implement the SFG by using SC integrators

C: Use the general SC biquad topology, when you know the capacitors' value's depedency on the s-plane transfer function →calculate all the capacitor values by using their frequency characteristics

Cascaded biquads

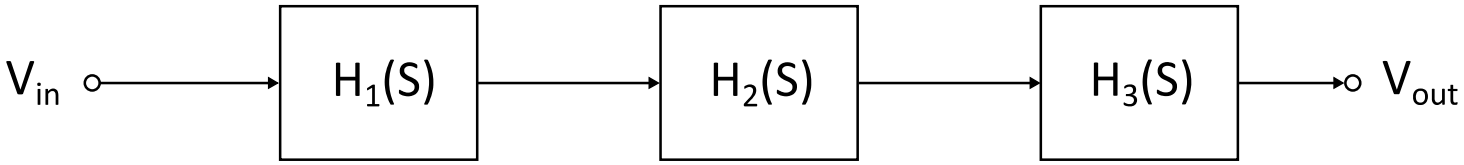

$$H(z) = H_1(z) \cdot H_2(z) \cdot H_3(z) \ldots$$

$$H(z) = \left[-\frac{a_2^{'} z^2 + a_1^{'} z + a_0^{'}}{b_1^{'} z^2 + b_1^{'} z + 1} \right] \left[\frac{a_2^{''} z^2 + a_1^{''} z + a_0^{''}}{b_1^{''} z^2 + b_1^{''} z + 1} \right] \ldots$$

- any higher even order transfer function can be partitioned into 2nd order sections
- higher order filters can be built with cascaded 2nd order building blocks called biquads
- odd order transfer functions can be built with cascaded 2nd order building blocks and one integrator stage
- use of well known SC biquads topology speeds up design cycle and increases reliability
- typically higher sensitivity and capacitor spread compared to ladder implementation

Switched capacitor biquads

General 2nd order transfer function in s-plane:

$$H(z)=\frac{C_2s^2+C_1s+C_0}{d_2s^2+d_1s+d_0}\doteq\frac{k_i\left[s^2+\left(\frac{\omega_z}{Q_z}\right)s+\omega_z^2\right]}{s^2+\left(\frac{\omega_p}{Q_p}\right)s+\omega_p^2}$$

Different filter types can be selected with coefficients of denominator:

LP: $C_2=C_1=0$

BP: $C_2=C_0=0$

HP: $C_1=C_0=0$

AP: $C_1,C_2,C_0\neq 0$ or $\omega_z=\omega_p$

NOTCH: $\omega_z\neq\omega_p$

Z-plane:

$$H(z)=-\frac{a_2z^2+a_1z+a_0}{b_2z^2+b_1z+1}$$

Z-plane coefficients can be calculated from s-plane coefficients:

$$a_i=f(c_i,d_i)$$
$$b_i=f(c_i,d_i)$$

Using one of the z-transformations

$$z\doteq e^{sT}\cong 1+sT \quad \text{, forward Euler}$$
$$\cong(1\text{-}sT)^{-1} \quad \text{, backward Euler}$$
$$\cong\frac{1+\frac{sT}{2}}{1-\frac{sT}{2}} \quad \text{, bilinear}$$
$$\cong\frac{1}{2}\left[\left(2+s^2T^2\right)\pm\sqrt{s^2T^2\left(4+s^2T^2\right)}\right] \quad \text{, LDI}$$

Determination of pole frequency and quality factor

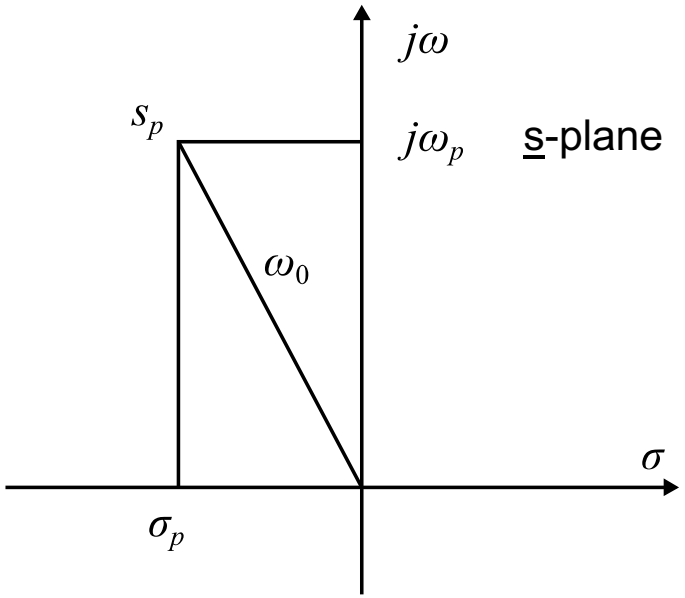

pole frequency: $\omega_0 = |s_p|$

quality factor: $Q = \dfrac{\omega_0}{2|\sigma_p|}$

$$s_p = \sigma_p \pm j\omega_p$$

SC biquad synthesis

General purpose 2nd order transfer function:

$$H(s) = \frac{V_{out}}{V_{in}} = -\frac{K_2 s^2 + K_1 s + K_0}{s^2 + \left(\frac{\omega_0}{Q}\right)s + \omega_0^2}$$

The biquad consists of 2 integrators i.e. α k/s-terms
Multiply both sides with the product of denominators

$$\Rightarrow V_{out} s^2 = -\left(K_2 s^2 + K_1 s + K_0\right)V_{in} - \left(\frac{\omega_0}{Q}s + \omega_0^2\right)V_{out}$$

Obtain the state equations by dividing with $s^2 \rightarrow$

$$1)\quad V_{out} = -\frac{1}{s}\left[\left(K_1 + K_2 s\right)V_{in} + \frac{\omega_0}{Q}V_{out} - \omega_0 V_1\right]$$

$$2)\quad V_1 = -\frac{1}{s}\left(\frac{K_0}{\omega_0}V_{in} + \omega_0 V_{out}\right)$$

SFG-presentation of state equations:
state equation 1:

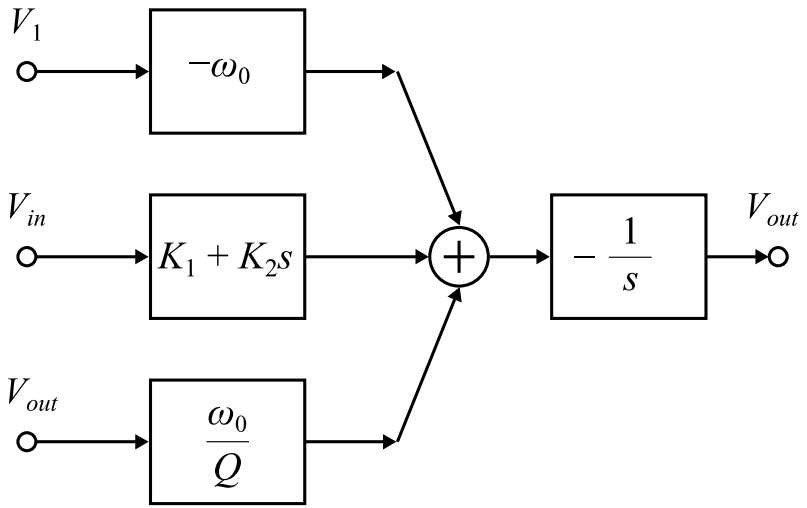

state equation 2:

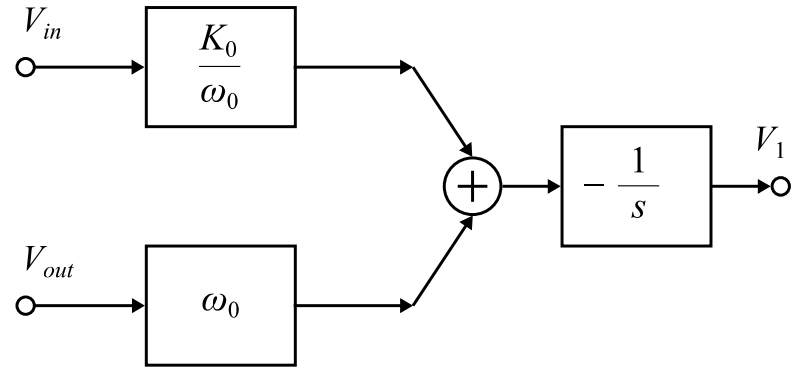

SFG of the biquad

-combine the SFG:s of the two state equations

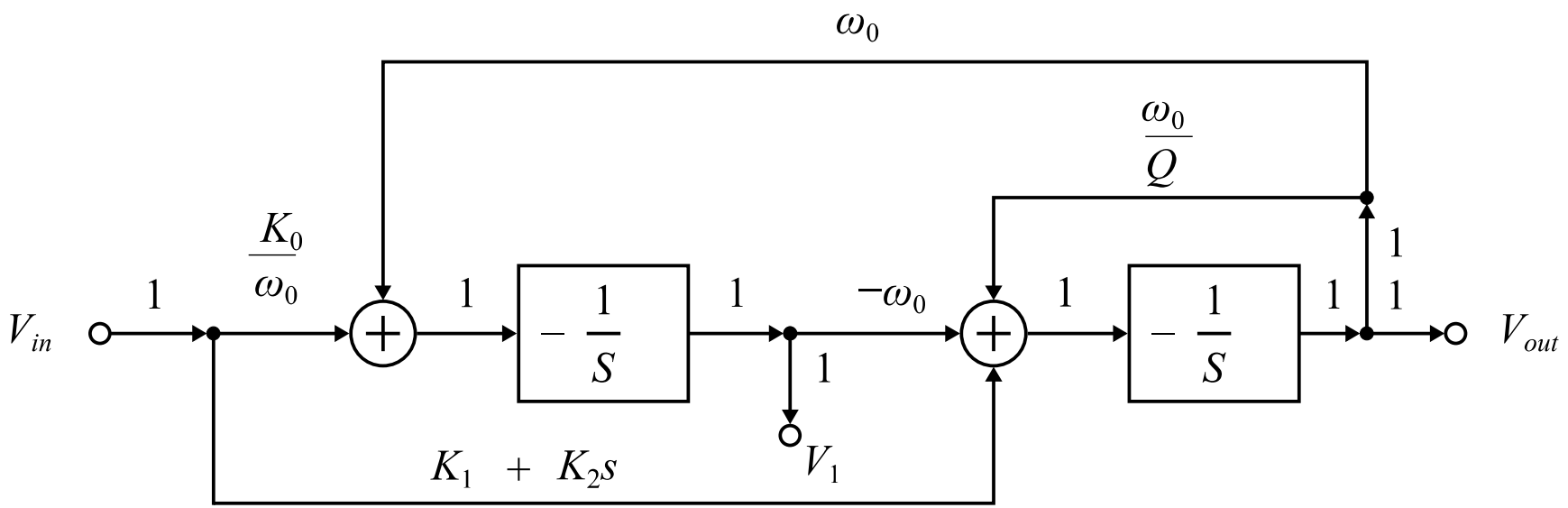

Realizing SFG:s with RC opamp integrators

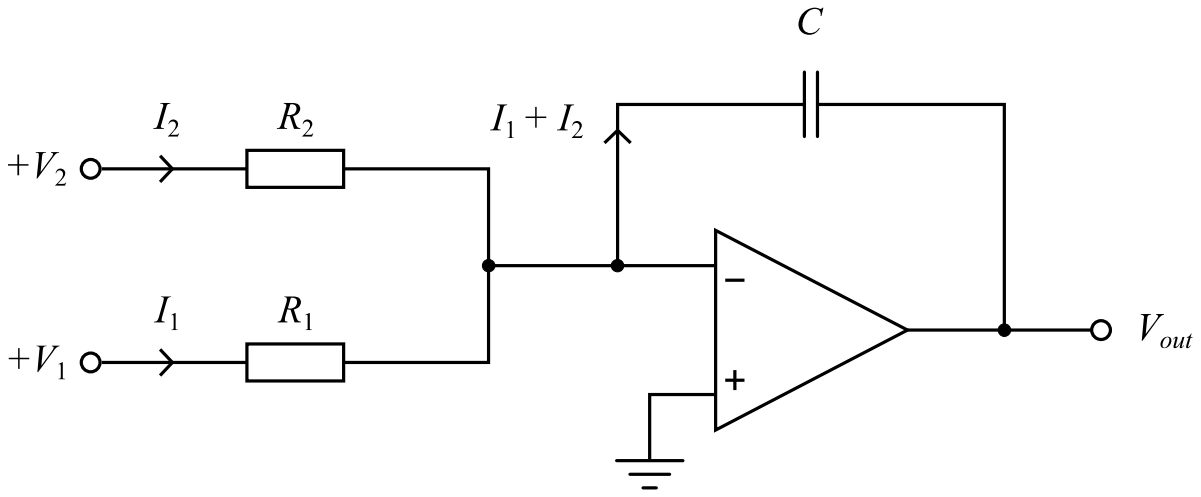

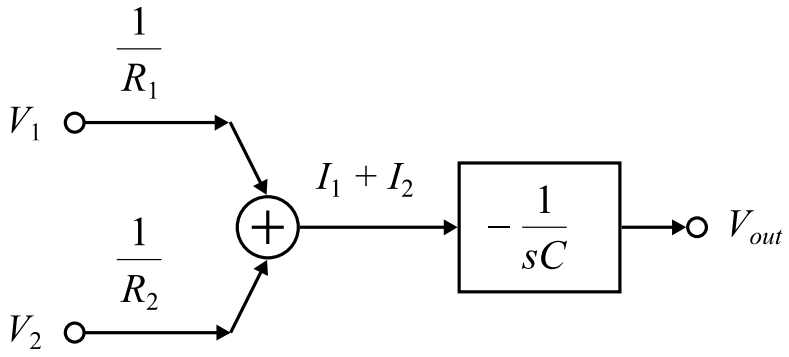

- input resistors convert the input voltages to currents

$$I_1 = \frac{1}{R_1} V_1$$

$$I_2 = \frac{1}{R_2} V_2$$

- feedback capacitor integrates the current

$$V_{out} = -\frac{1}{sC}\left(I_1 + I_2\right)$$

- the factors of branches are admittances

- the integrator is formed by the feedback capacitor

RC-active realization of the state equations

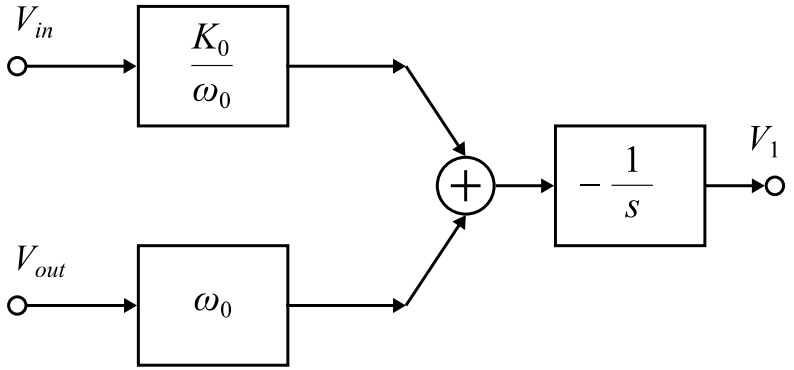

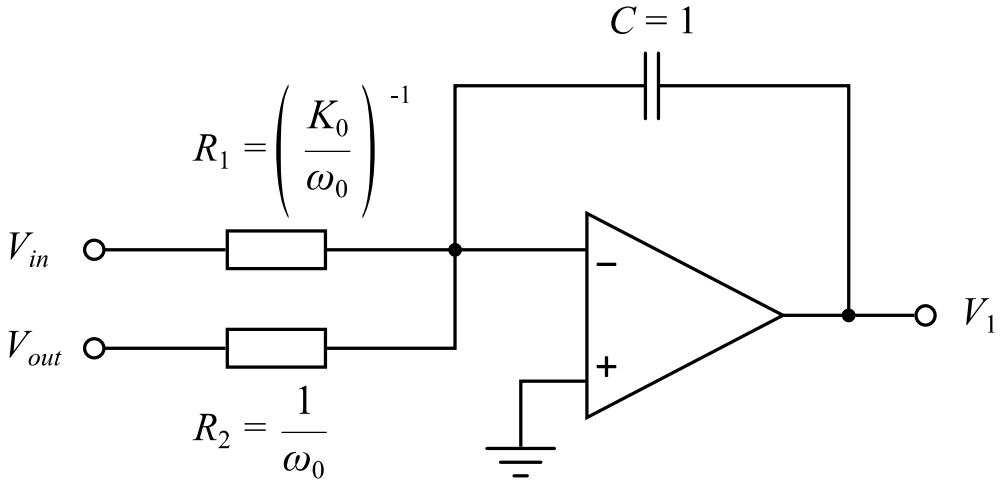

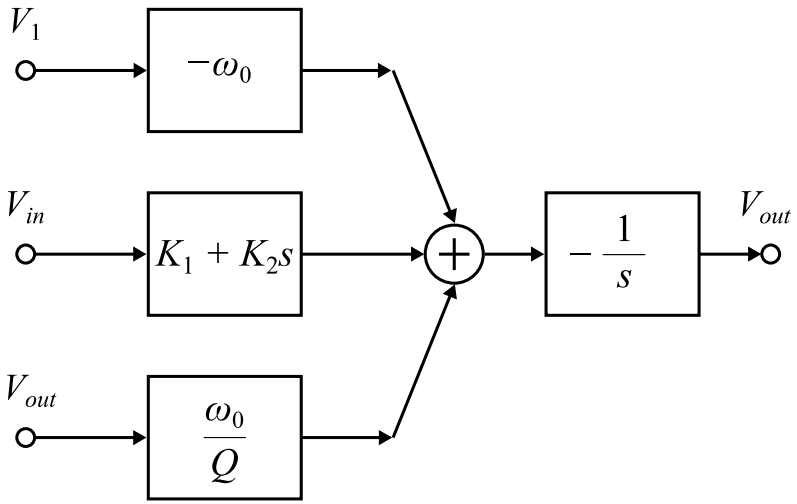

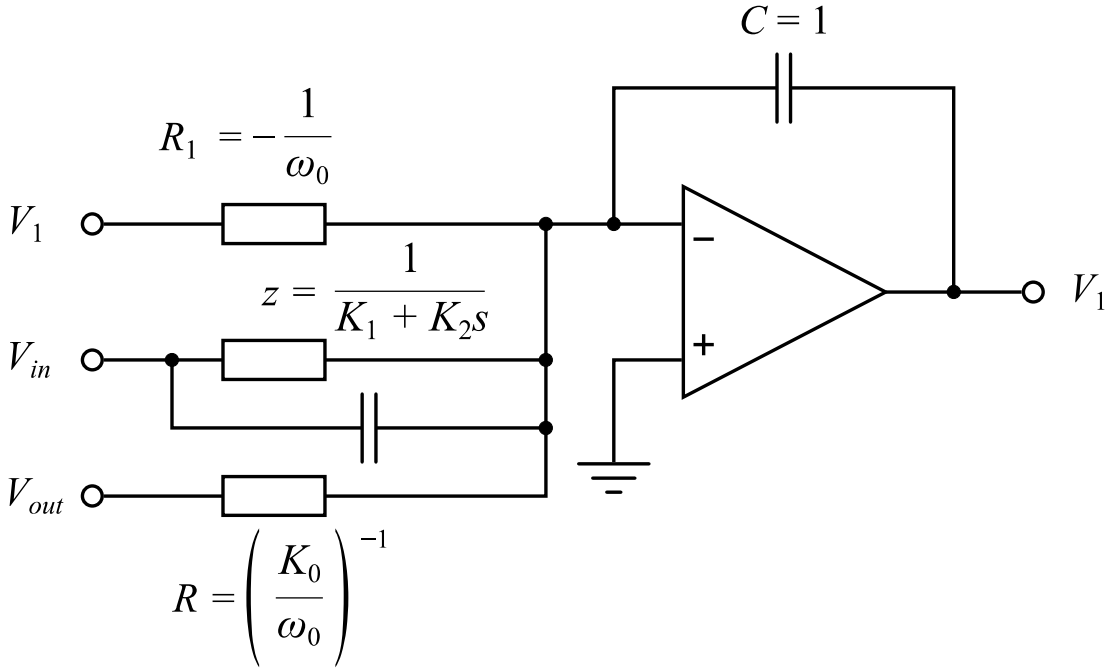

RC-active filter realization of biquad

- combine the two RC integrators to form the biquad

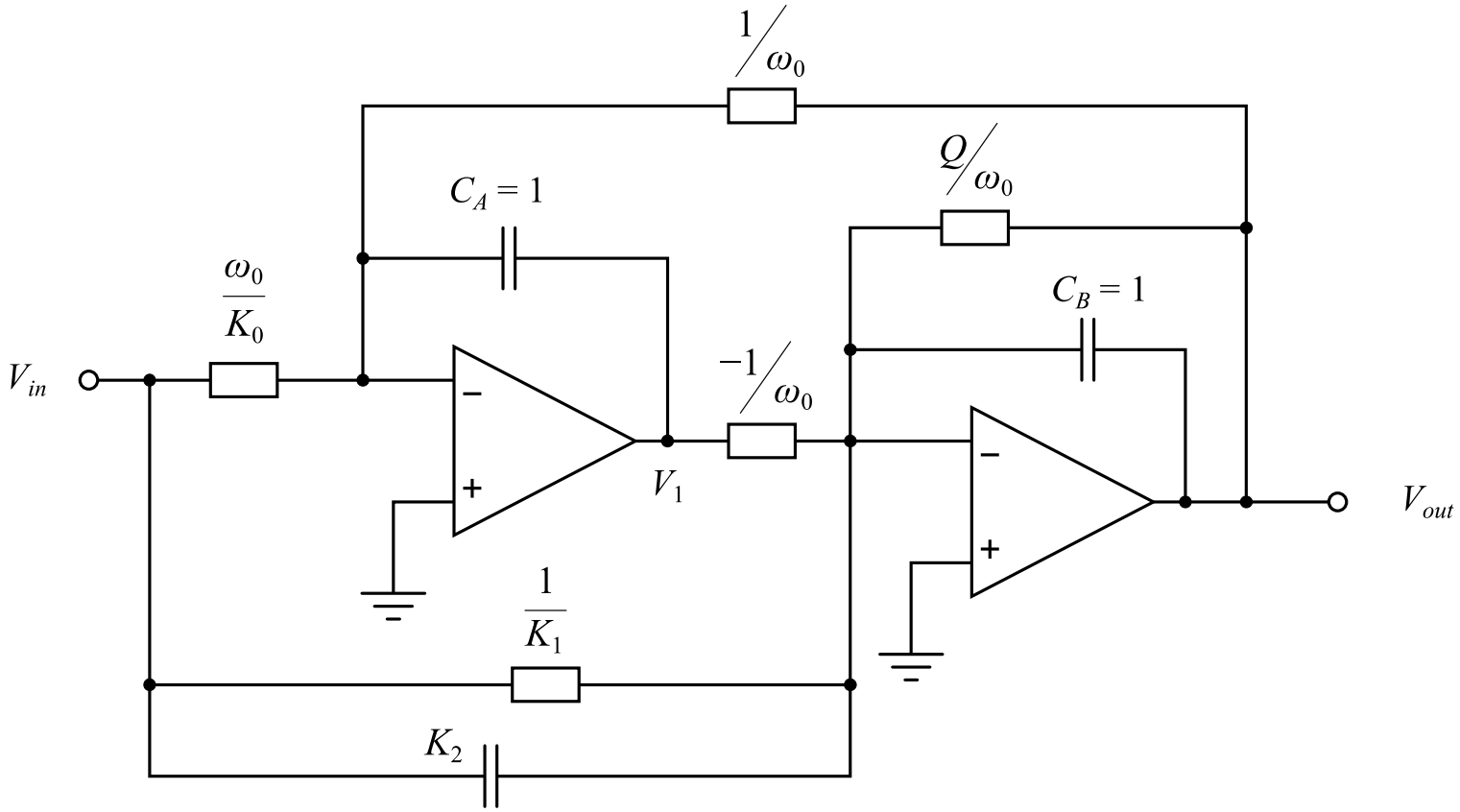

- the negative resistor must be realized with a separate R-R amplifier

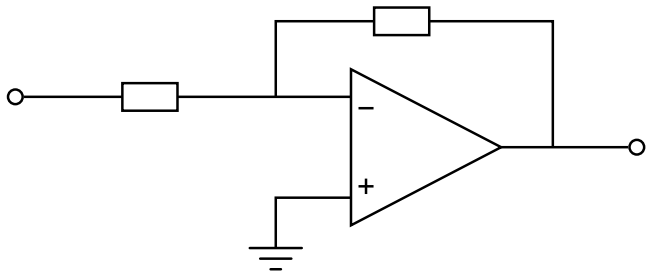

SC-active realization

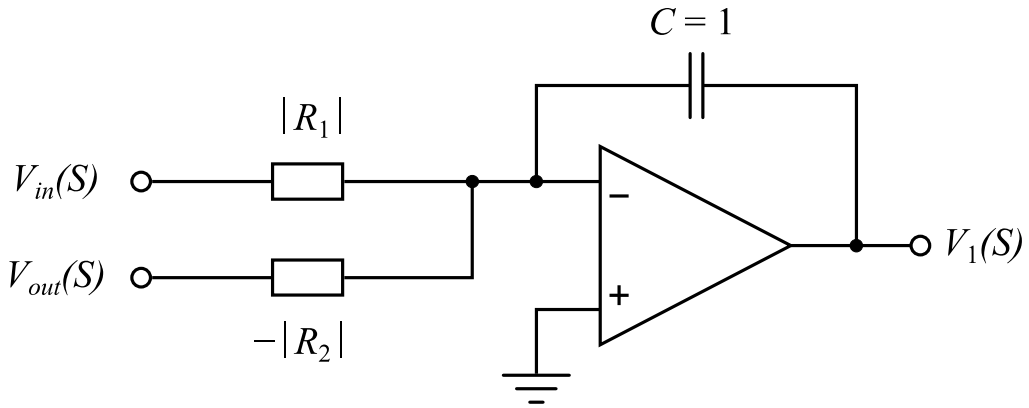

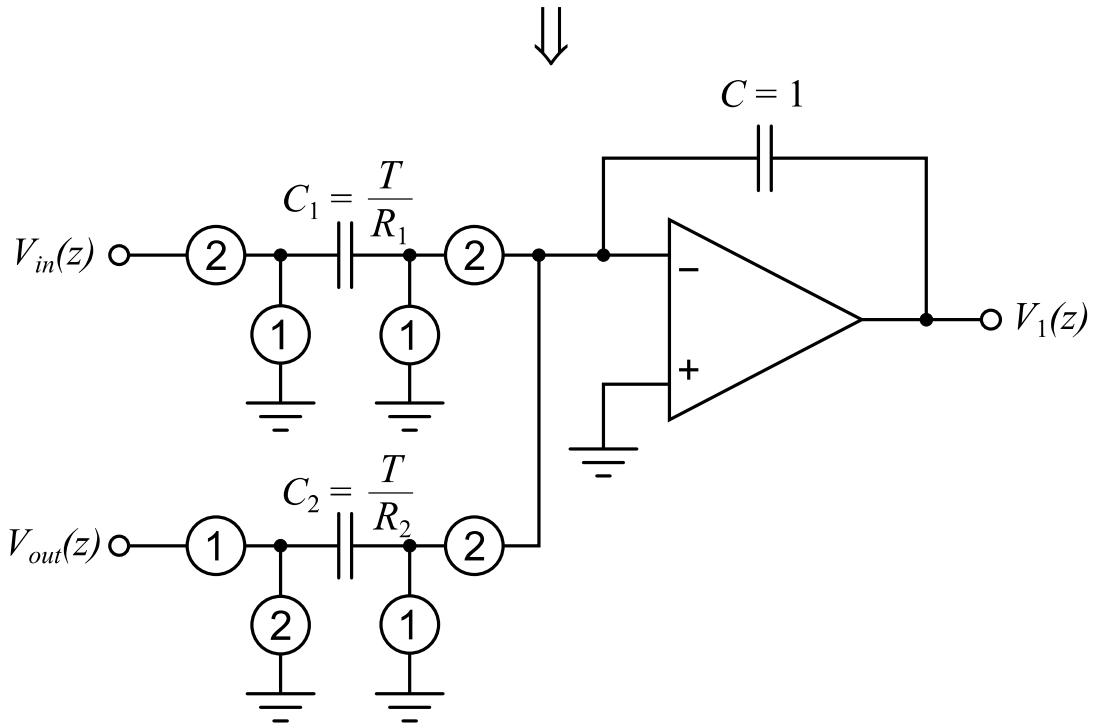

RC opamp integrator:

$$RC: \quad V_1(s) = -\frac{1}{s}\left(\frac{1}{R_1}V_{in}(s) - \frac{1}{R_2}V_{out}(s)\right)$$

SC integrator:

$$SC: \quad V_1(z) = -\frac{1}{1-z^{-1}}\left(C_1 V_{in}(z) - C_2 z^{-1} V_{out}(z)\right)$$

Notice the two SC integrators:

$$inv. \quad V_{out}(z) = -\frac{\frac{C_1}{C_2}}{1-z^{-1}} V_{in}(z)$$

$$noninv. \quad V_{out}(z) = \frac{\frac{C_3}{C_2} z^{-1}}{1-z^{-1}} V_{in}(z)$$

Negative coefficients are easily realized by swapping the clock-phases of the input switches.

Switched capacitor biquad

- Replace the resistors with switched-capacitors
- The negative resistor is replaced with the SC-connection of non-inverting integrator (no extra amplifiers needed)

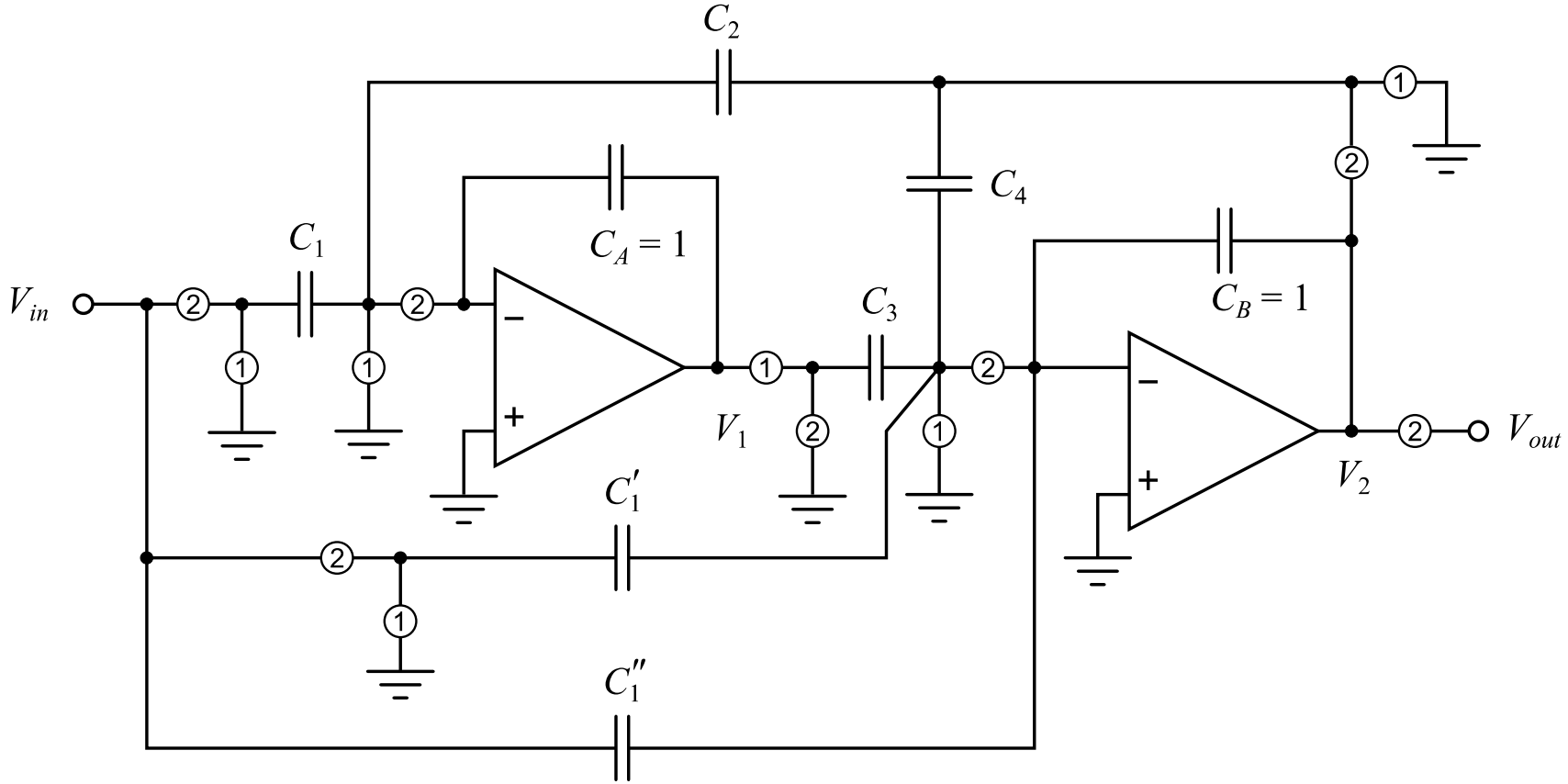

Notice:

The non-switched capacitor C''_1 is unaltered

$$\Delta Q_b = C_1''\left(v_{in}(t) - v_{in}(t-T)\right), \quad T = \frac{1}{f_{clk}}, \quad \omega_0 << f_{clk}, \quad \omega_0 T << 1$$

Calculation of capacitor values

Equivalent SC resistor:

$$R_{SC} = \frac{T}{C}$$

$$\Rightarrow C = \frac{T}{R_{SC}}$$

Replacing R_{SC} by the resistor values in RC-active biquad we calculate the capacitor values:

$$C_2 = \omega_0 T << 1, \quad \omega_0 << f_{clk}$$

$$C_3 = \omega_0 T$$

$$C_1 = \frac{k_0 T}{\omega_0} \Rightarrow C_1 = |H_a(0)| \omega_0 T$$

$$C_1'' = k_2 = 1 \neq \omega$$

$$k_1 = \omega_z \Rightarrow C_1' = \omega_z T$$

$$C_4 = \frac{\omega_0 T}{Q}$$

When Q is low i.e. <1 the capacitor spread is given by

$$C_2, C_3 = \omega_0 T$$

which are the smallest capacitors. When Q>1 the smallest capacitor is

$$C_4 = \frac{\omega_0 T}{Q}$$

Thus the topology is not suitable for high Q.

Z-domain SFG of SC biquad

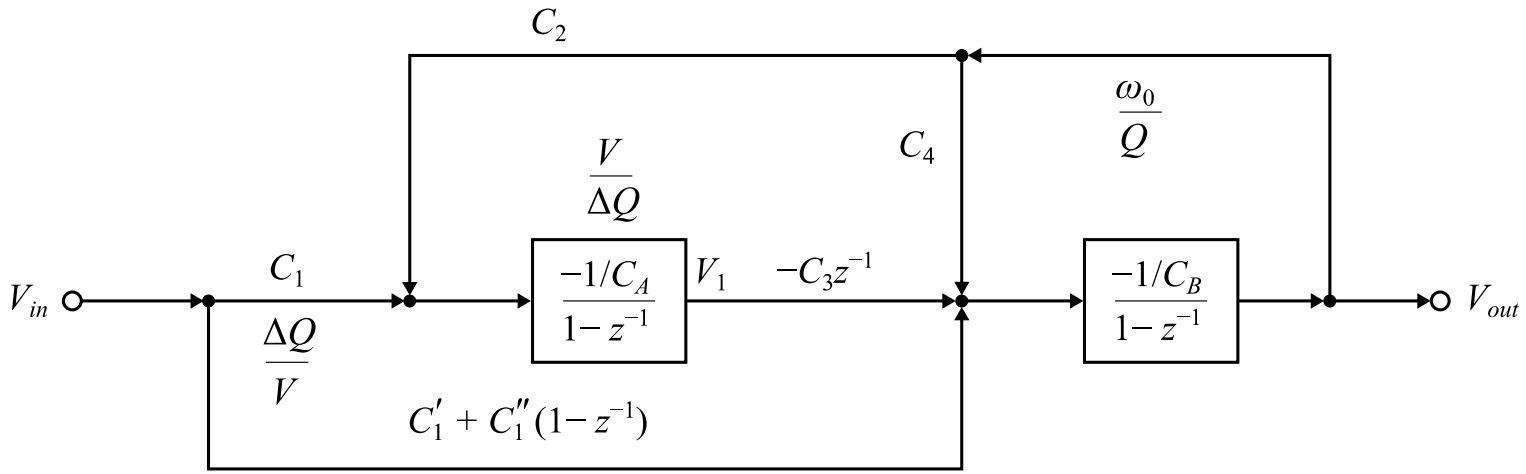

Z-domain transfer function

$$H(z) = \frac{V_{out}(z)}{V_{in}(z)} = -\frac{\left(C_1' + C_1''\right)z^2 + \left(C_1 C_3 - C_1' - 2C_1''\right)z + C_1''}{\left(1 + C_4\right)z^2 + \left(C_2 C_3 - C_4 - 2\right)z + 1}$$

Capacitor values calculated from the general 2nd order z-domain transfer function

$$C_1'' = a_0$$

$$C_1' = a_2 - C_1'' = a_2 - a_0$$

$$C_1 = \frac{1}{C_3}\left(a_1 + C_1' + 2C_1''\right) = \frac{a_0 + a_1 + a_2}{C_3}$$

$$C_4 = b_2 - 1$$

$$C_2 C_3 = b_1 + 2 + C_4 = b_1 + b_2 + 1$$

Relationship between frequency parameters and capacitor values

General 2nd order transfer functions in s- and z-domain

$$H(s) = -\frac{K_2 s^2 + K_1 s + K_0}{s^2 + \left(\frac{\omega_o}{Q}\right)s + \omega_o^2}$$

$$H(z) = -\frac{a_2 z^2 + a_1 z + a_0}{b_1 z^2 + b_1 z + 1}$$

Applying bilinear transformation

$$s = \frac{2}{T}\frac{z-1}{z+1}$$

We may calculate the a_i, b_i coefficients as function of frequency parameters k_i, ω_o and Q i.e.

$$a_i = f(K_i, \omega_o, Q)$$
$$b_i = f(K_i, \omega_o, Q)$$

Using the relationship between SC biquad capacitor values and the coefficients (a_i, b_i) of 2nd order z-domain transfer function, we can calculate the relationships between capacitor values and frequency parameters.

Generic second-order z-domain transfer functions

Generic Form	Numerator N(z)	z-Plane Poles and Zeros $(\omega\tau << 1)$	
LP20 (bilinear transform)	$K(1 + z^{-1})^2$	LP20 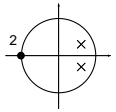	LP11 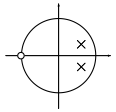
LP11	$Kz^{-1}(1 + z^{-1})$		
LP10	$K(1 + z^{-1})$	LP10 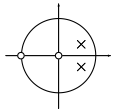	LP02 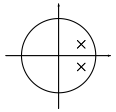
LP02	Kz^{-2}		
LP01	Kz^{-1}	LP01 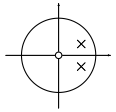	LP00 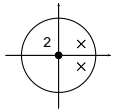
LP00	K		
BP10 (bilinear transfrom)	$K(1 - z^{-1})(1 + z^{-1})$	BP10 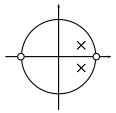	BP01 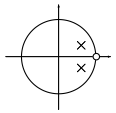
BP01	$Kz^{-1}(1 - z^{-1})$		
BP00	$K(1 - z^{-1})$	BP00 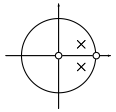	HP 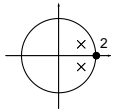
HP (bilinear transform)	$K(1 - z^{-1})^{-2}$		
LPN (bilinear transform)	$K(1 + \varepsilon z^{-1} + z^{-2})$, $\varepsilon > \alpha/\sqrt{\beta}$, $\beta > 0$	LPN 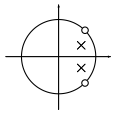	HPN 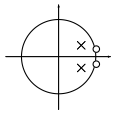
HPN (bilinear transform)	$K(1 + \varepsilon z^{-1} + z^{-2})$, $\varepsilon < \alpha/\sqrt{\beta}$, $\beta > 0$		
AP (bilinear transform)	$K(\beta + \alpha z^{-1} + z^{-2})$	AP 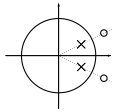	

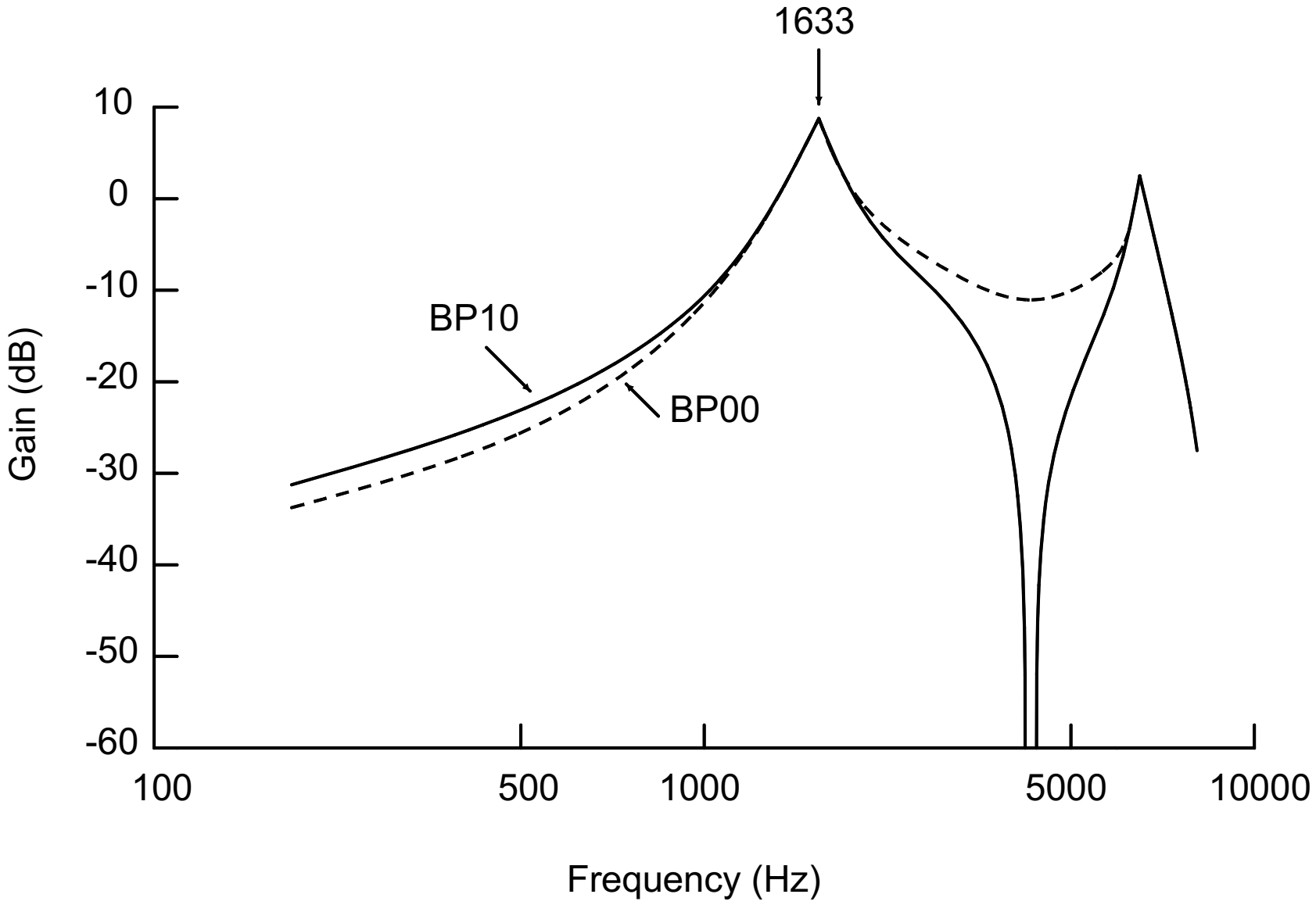
1633
10
0
-10
-20
-30
-40
-50
-60
Gain (dB)
BP10
BP00
100
500
1000
5000
10000
Frequency (Hz)

The modified SC biquad to realize the all-pass transfer function

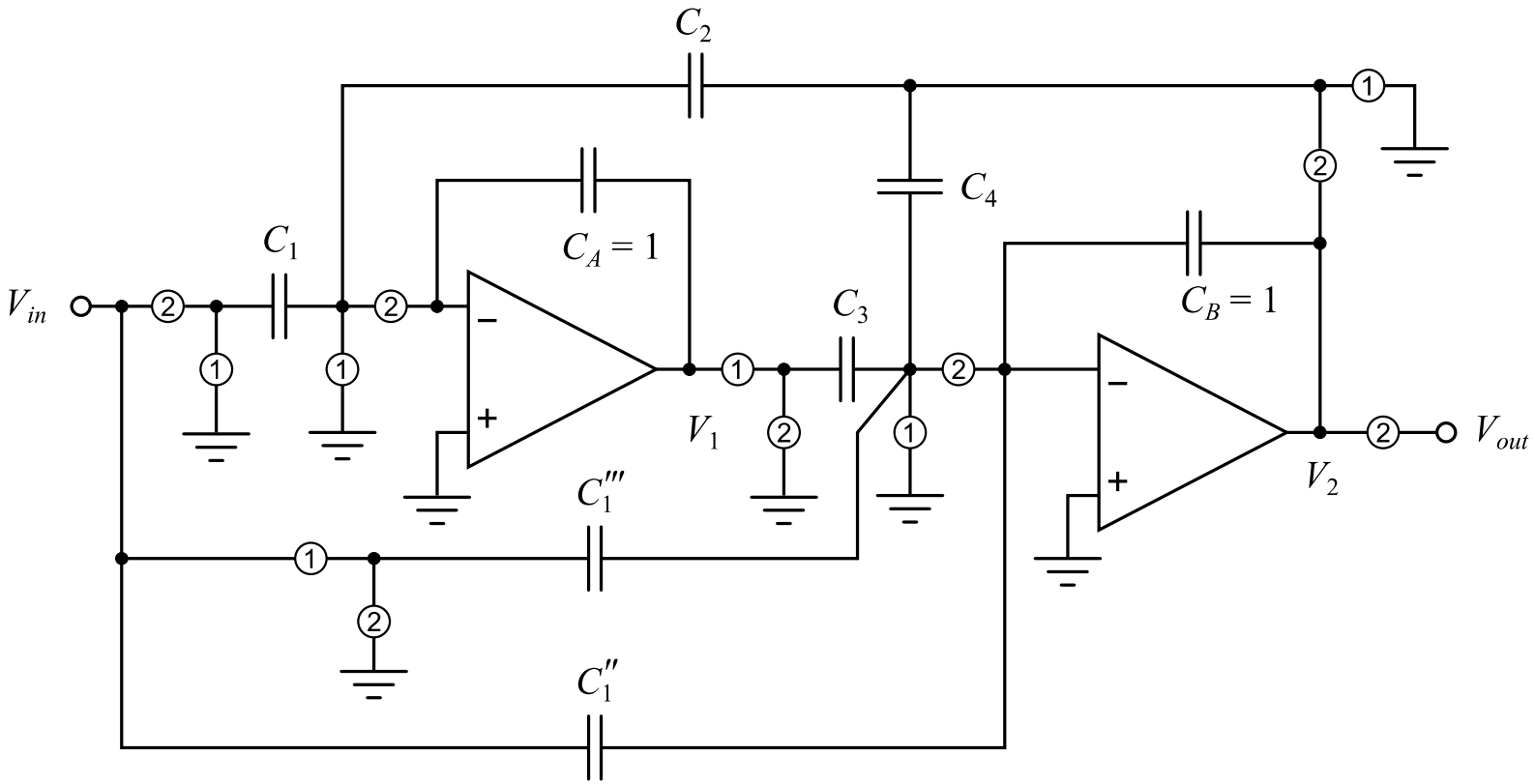

All-pass transfer function:

$$H(z) = \frac{V_{out}(z)}{V_{in}(z)} = -\frac{C_1'' z^2 + \left(C_1 C_3 - C_1''' - 2C_1''\right)z + \left(C_1'' + C_1'''\right)}{\left(1 + C_4\right)z^2 + \left(C_2 C_3 - C_4 - 2\right)z + 1}$$

High-Q biquad

Assume high Q i.e. Q>3

$$H(s)=\frac{V_{out}}{V_{in}}=-\frac{K_2s^2+K_1s+K_0}{s^2+\left(\frac{\omega_0}{Q}\right)s+\omega_0^2}$$

Multiply both sides with the product of nominators and arrange the terms

$$\Rightarrow V_{out}s^2=-\left(K_2s^2+K_1s+K_0\right)V_{in}-\left(\frac{\omega_0}{Q}s+\omega_0^2\right)V_{out}$$

divide by s^2 and leave $\frac{1}{s}$ in front to realize one integrator

$$\Rightarrow V_{out}=-\frac{1}{s}\left[sK_2V_{in}+K_1V_{in}+\frac{K_0}{s}V_{in}+\frac{\omega_0}{Q}V_{out}+\frac{\omega_0^2}{s}V_{out}\right]$$

$$=-\frac{1}{s}\left[sK_2V_{in}+\left(\frac{K_0}{s}+K_1\right)V_{in}+\left(\frac{\omega_0}{Q}+\frac{\omega_0^2}{s}\right)V_{out}\right]$$

separate $\frac{\omega_o}{Q}$ i.e. take ω_o/s in front of the second term

$$\underline{\underline{V_{out}=-\frac{1}{s}\left[sK_2V_{in}+\frac{\omega_0}{s}\left[\left(\frac{K_0}{\omega_0}+\frac{K_1}{\omega_0}s\right)V_{in}+\left(\omega_0+\frac{s}{Q}\right)V_{out}\right]\right]}}$$

The state equations are

(1) $V_{out}=-\frac{1}{s}\left(K_2sV_{in}-\omega_0V_1\right)$

(2) $V_1=-\frac{1}{s}\left[\left(\frac{K_0}{\omega_0}+\frac{K_1}{\omega_0}s\right)V_{in}+\left(\omega_0+\frac{s}{Q}\right)V_{out}\right]$

Signal flow graphs of the state equations

$$(1) \qquad V_{out} = -\frac{1}{s}\left(K_2 s V_{in} - \omega_0 V_1\right)$$

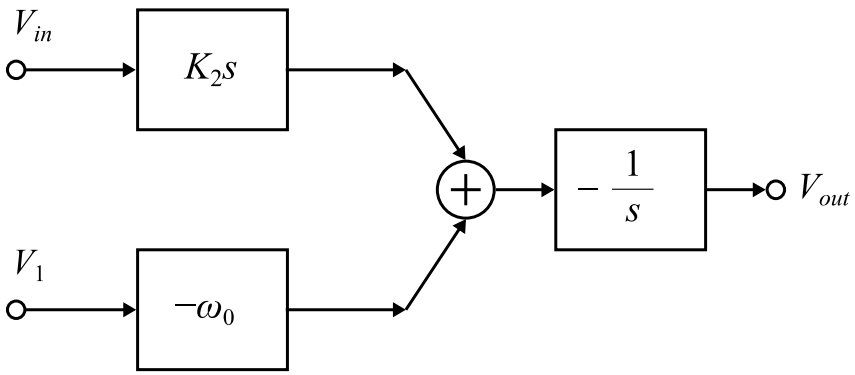

$$(2) \qquad V_1 = -\frac{1}{s}\left[\left(\frac{K_0}{\omega_0} + \frac{K_1}{\omega_0}s\right)V_{in} + \left(\omega_0 + \frac{s}{Q}\right)V_{out}\right]$$

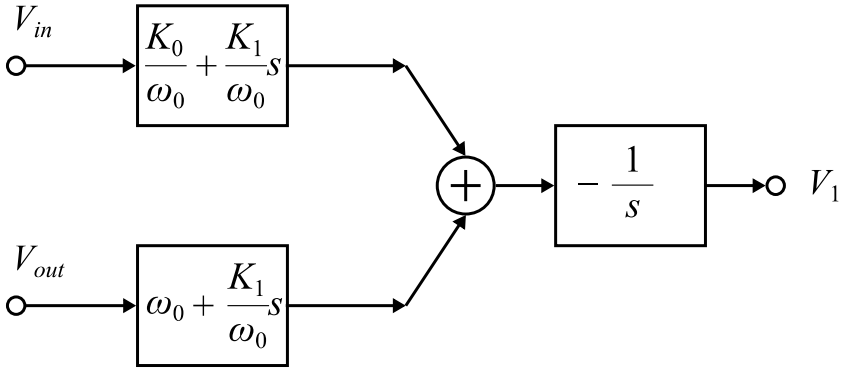

SFG of high-Q biquad

Combine the SFGs of the state equations to form the SFG of the biquad

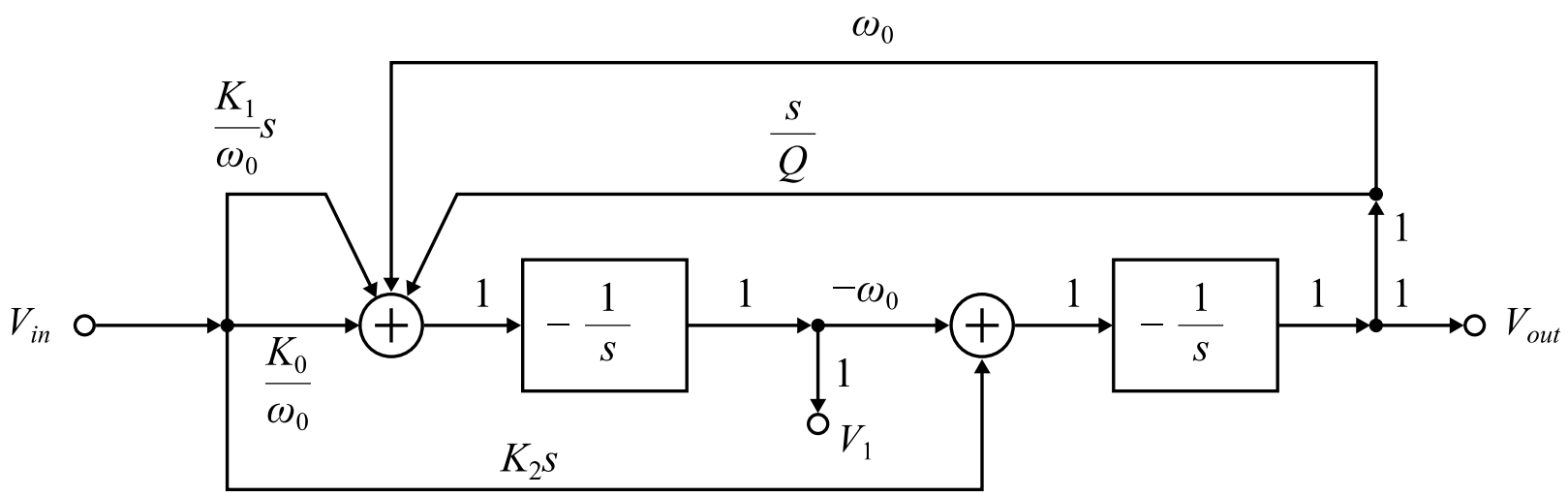

RC-active realization of high-Q biquad

The factors of the branches in the SFG are implemented with admittances in RC-active realization

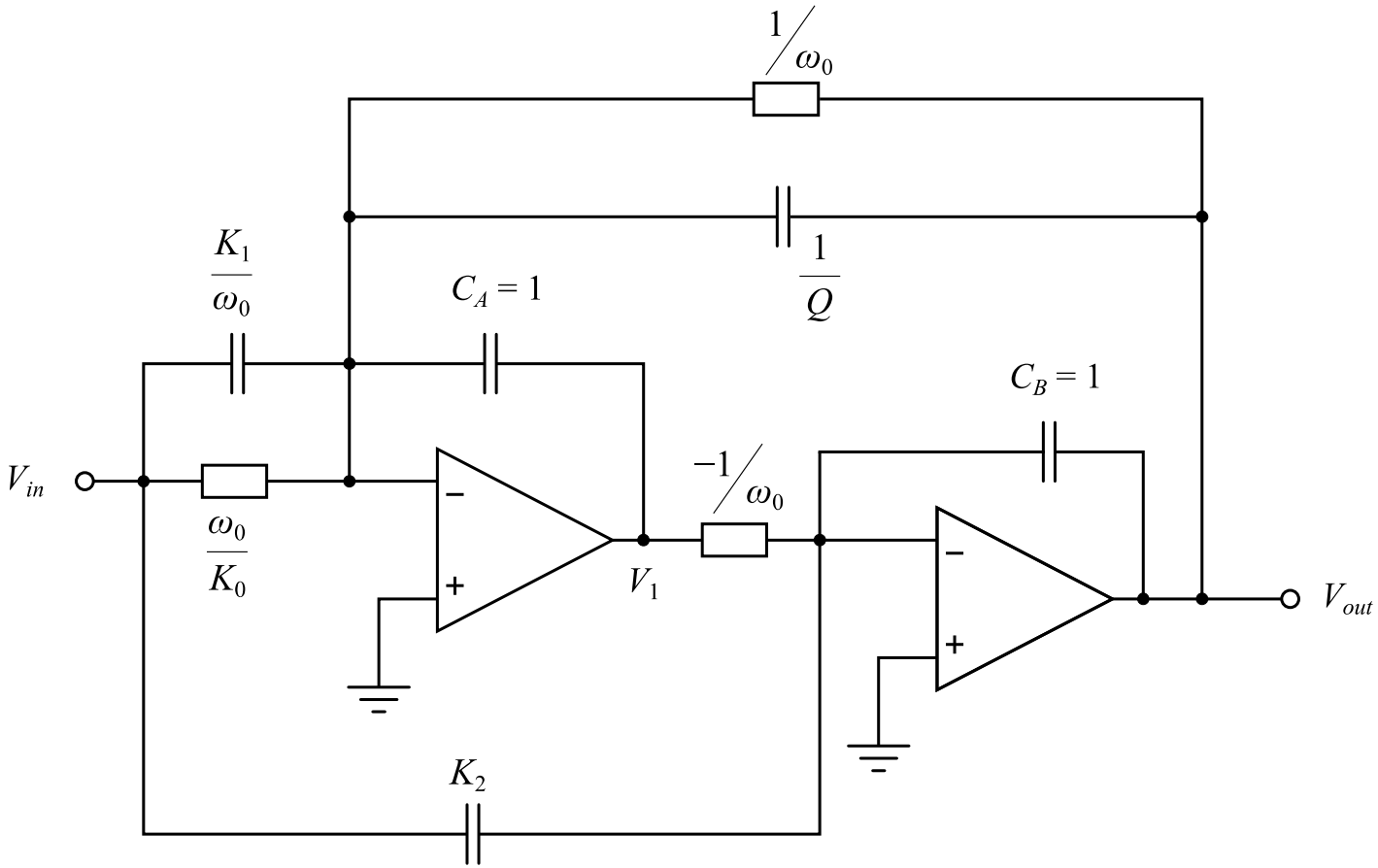

High-Q SC biquad

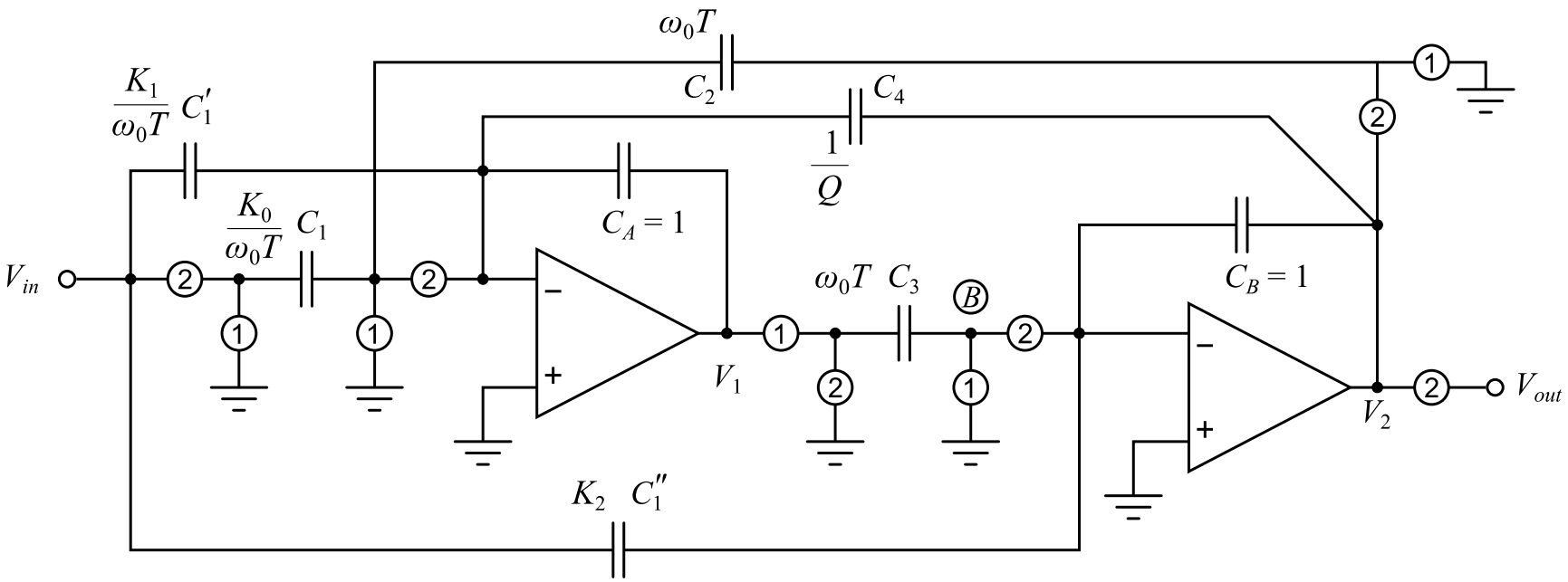

capacitor values are:

$$C_1 = \frac{TK_0}{\omega_0} = |H_a(0)|\omega_0 T$$

$$C_1' = \frac{K_1}{\omega_0}$$

$$C_1'' = K_2$$

$$C_2 = \omega_0 T$$

$$C_3 = \omega_0 T$$

$$C_4 = \frac{1}{Q}$$

capacitance spread, when Q > 1

$$\frac{C_A}{C_2} \cong \frac{1}{\omega_0 T}$$

C_2, C_3 are the smallest capacitors

Z-domain SFG of high-Q SC biquad

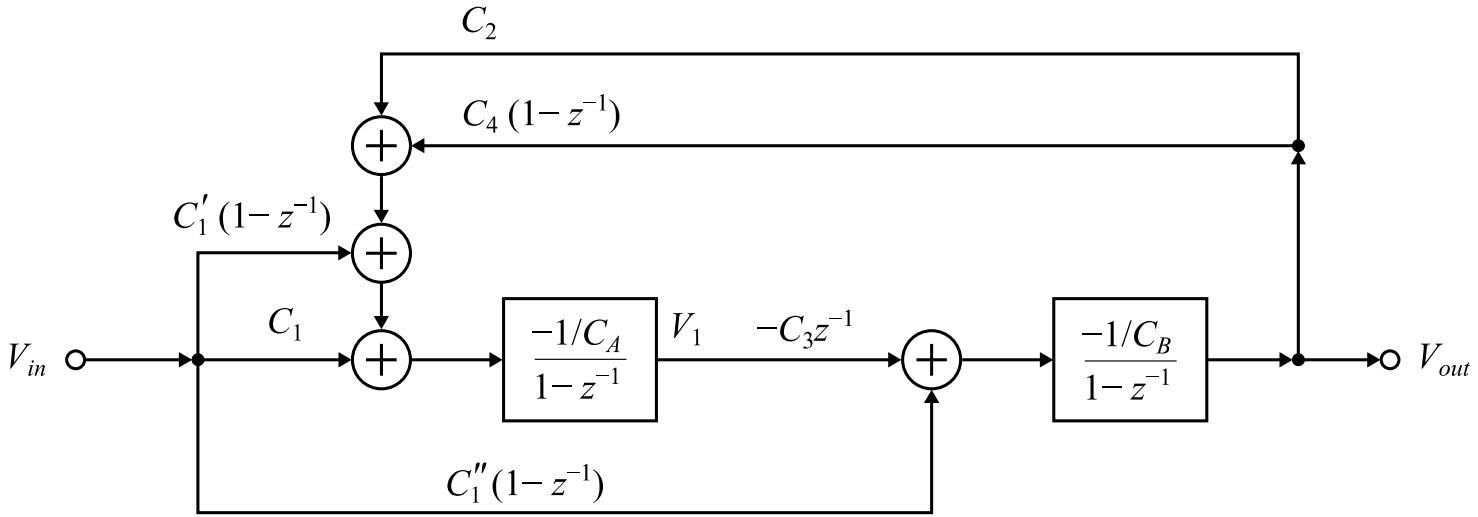

z-domain transfer function calculated from the SFG

$$H(z)=-\frac{C_1''z^2+\left(C_1C_3+C_1'C_3-2C_1''\right)z+\left(C_1''-C_1'C_3\right)}{z^2+\left(C_2C_3+C_3C_4-2\right)z+\left(1-C_3C_4\right)}$$

capacitor value calculated from the coefficients of general 2nd order transfer function:

$$C_1''=\frac{a_2}{b_2}$$

$$C_1'=\frac{C_1''-\frac{a_0}{b_2}}{C_3}=\frac{a_2-a_0}{b_2C_3}$$

$$C_1=\frac{\left(\frac{a_1}{b_2}-C_1'C_3+2C_1''\right)}{C_3}=\frac{a_0+a_1+a_2}{b_2C_3}$$

$$C_4=\frac{1-\frac{1}{b_2}}{C_3}$$

$$C_2C_3=\frac{b_1}{b_2}+2-C_3C_4=\frac{1+b_1+b_2}{b_2}$$

The modified SC biquad to realize the all-pass transfer function

All-pass transfer function:

$$H(z) = -\frac{C_1'' z^2 + \left(C_1 C_3 - C_1''' - 2C_1''\right) z + \left(C_1'' + C_1'''\right)}{z^2 + \left(C_2 C_3 + C_3 C_4 - 2\right) z + \left(1 - C_3 C_4\right)}$$

Capacitor Scaling

- to reduce the area
- to optimise the dynamic range

Dynamic Range

$$\boxed{20\log\frac{v_{in,\max}}{v_{in,\min}}} \quad [\text{dB}]$$

$v_{in,max}$ is determined by distortion

$v_{in,min}$ is determined by noise

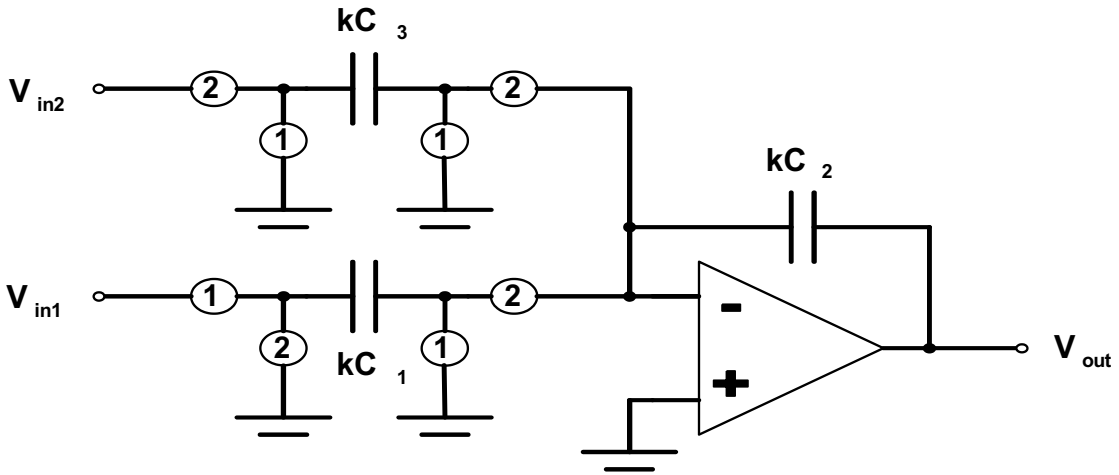

The charge from V_{in1} (assume $k = 1$)

$$\Delta Q_1 = C_1 V_{in}$$

$$\Delta V_{out} = \frac{\Delta Q_2}{C_2} = \frac{C_1}{C_2} V_{in}$$

Scaling with the factor k

$$\Delta Q_1 = kC_1 V_{in}$$

$$\Delta V_{out} = \frac{\Delta Q_2}{kC_2} = \frac{kC_1}{kC_2} V_{in} = \frac{C_1}{C_2} V_{in} = \Delta V_{out}$$

At the amplifier input charges are summed

$$\Delta Q = \Delta Q_1 + \Delta Q_3$$

$$\Delta Q' = k\Delta Q_1 + k\Delta Q_3$$

$\Rightarrow$ To keep the transfer function unchanged all the capacitors at the amplifier input node has to be scaled with the same factor.

Dynamic Range Maximization

assume V_{MAX} = maximum output voltage of operational amplifier and A_p is filter's amplification on band-pass

$$v_{in,\max} \le \frac{V_{MAX}}{A_2} = \frac{V_{MAX}}{A_p}\frac{V_{p5}}{V_{p2}} < \frac{V_{\max}}{A_p}$$

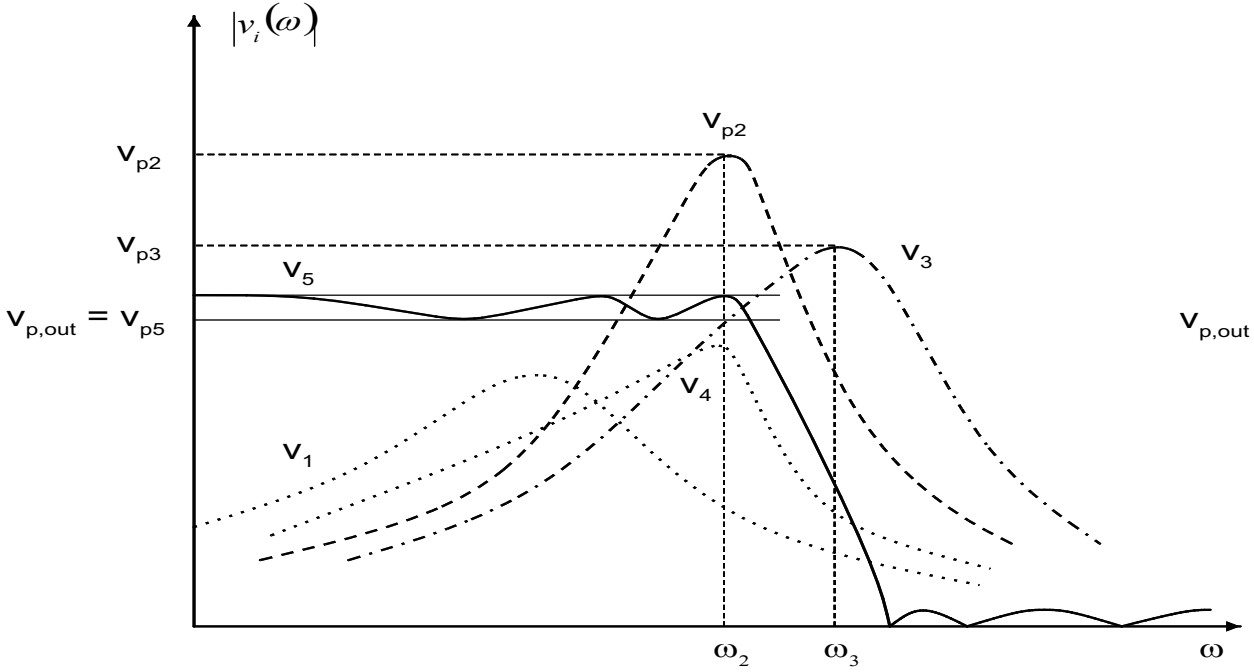

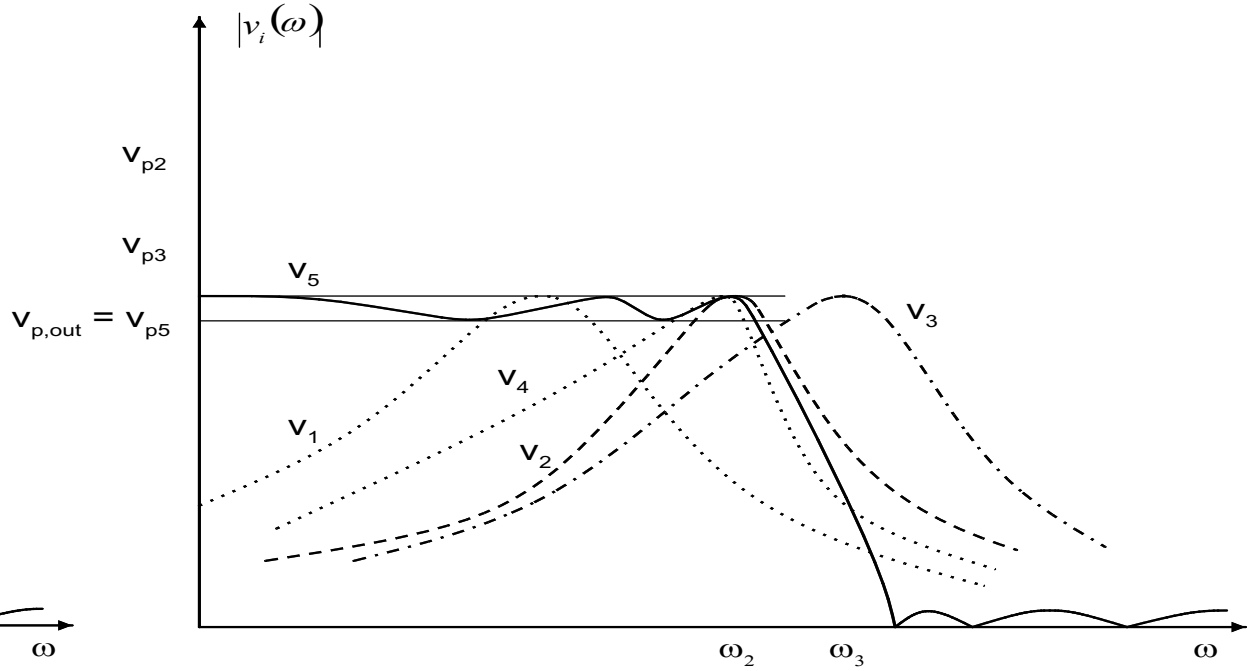

Scaling the output voltage of the first integrator:

$$\Delta Q_1 = C_1 V_{in}$$

$$\Delta V_{out} = \frac{\Delta Q_2}{kC_2} = \frac{C_1}{kC_2} V_{in} = \frac{1}{k} \Delta V_1$$

However, now C3 is sampling a smaller voltage and therefore transfers a smaller charge packet to the next integrator.

→ the incoming charges of the next integrator are inbalanced.

To keep the charge of C3 constant, we have to scale up C3 by factor of k

$$\Delta Q_3^{'} = kC_3 \frac{1}{k} V_1 = C_3 V_1 = \Delta Q_3$$

$$\Delta V_2 = \frac{\Delta Q_3^{'}}{C_4} = \frac{\Delta Q_3}{C_4} = \Delta V_2$$

Thus the transfer function will be uneffected.

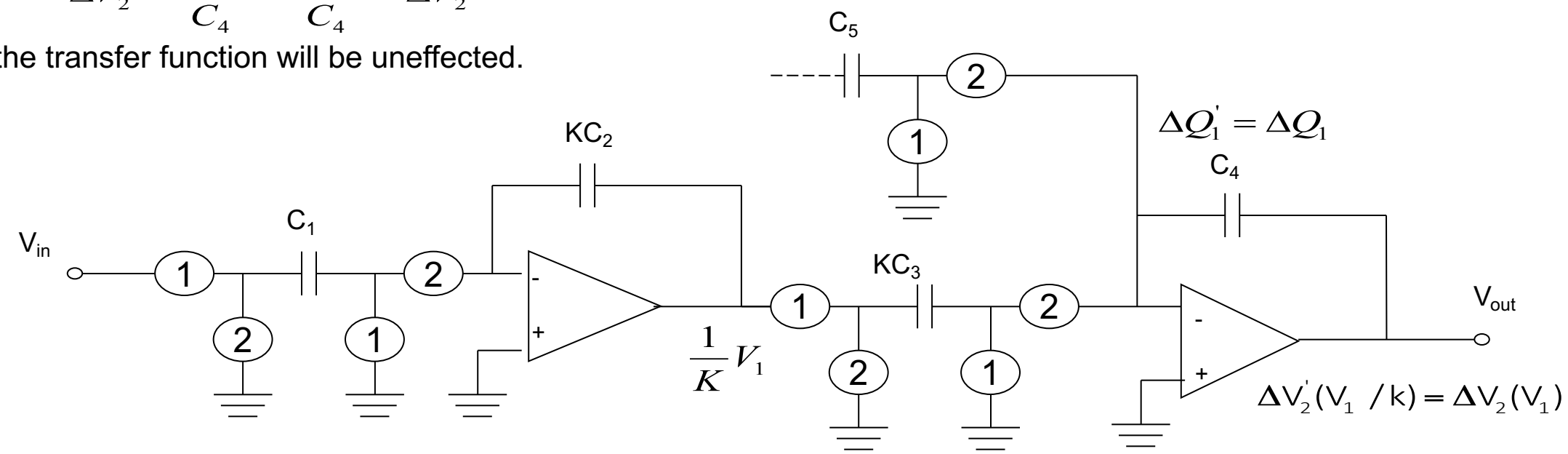

Rule for scaling:

The output of an integrator can be scaled by scaling all the capacitors connected to the output without effecting the transfer function.