ELEC-L8744 SPECIAL MEASUREMENTS IN ELECTRONICS

RESEARCH AND DEVELOPMENT

A WEB-BASED COURSE FOR SELF STUDY

P.ESKELINEN

Main course text book:

C. Coombs: ***Electronic Instrument Handbook***, McGraw-Hill, 1995 or later (ISBN 0-07-012616-X), 604 p. 2nd edition or a more recent one

Suggested additional material:

S. Derenzo: ***Practical Interfacing in the Laboratory***, Cambridge University Press, 2003 (ISBN 0-521-81527-4), 610 p.

D. Titterton and J. Weston: ***Strapdown Inertial Navigation Technology***, 2nd. ed., IEE, 2004 (ISBN 0-86341-358-7), 558 p.

P. Eskelinen: ***Introduction to RF Equipment and System Design***, Artech House, 2004 (ISBN 1-58053-665-4), 263 p.

plus application notes from test equipment manufacturers

HOW TO PROCEED ?

- GO AND GET COOMB'S BOOK AND HAVE IT AT HAND ALL THE TIME
- FOLLOW, PERHAPS SIDE-BY-SIDE, THE COMMENTED IDEAS IN THESE LECTURE NOTES AND COMPARE YOUR OWN THINKING WITH THAT PRESENTED IN THE BOOK
- MAKE "LECTURE NOTES" OF YOUR OWN
- WHEN GUIDED TO DO SO (OR WHEN EVER ADDITIONAL NEED COMES UP) STUDY THE SEPARATE THEMATIC PRESENTATIONS ON IMPORTANT TOPICS
- IF YOU RUN TO DESPERATE PROBLEMS IN UNDERSTANDING THE MATERIAL, YOU CAN CONTACT THE LECTURER THROUGH EMAIL
- INDICATE THE SLIDE NUMBER FOR REFERENCE TOGETHER WITH YOUR QUESTION
- AFTER GOING THROUGH ALL MATERIAL YOU MIGHT WANT TO HAVE A LOOK AT THE SAMPLE EXAM (THE LAST SLIDE IN THIS SET)

COURSE STRUCTURE IN BRIEF

- LECTURE 1: DEFINITIONS FOR SPECIALITY
- LECTURE 2: CALIBRATION AND STANDARDS
- LECTURE 3: MEASURING VOLTAGE, CURRENT AND POWER
- LECTURE 4: FREQUENCY AND TIME
- LECTURE 5: IMPEDANCE MEASUREMENTS
- LECTURE 6: SPECTRUM AND MODULATION MEASUREMENTS
- LECTURE 7: SOME EXOTIC SIGNALS
- LECTURE 8: DATA LOGGING AND COMPUTERIZED MEASURING SYSTEMS

LECTURE ONE

WHAT'S SO SPECIAL ?

ELECTRONIC ENGINEERS MEASURE A LOT ANYWAY, DON'T THEY ?

- DESIRED ULTIMATELY SMALL UNCERTAINTY OF MEASUREMENT
- EXTREME MEASURING CONDITIONS
- NEW PHYSICAL OPERATING PRINCIPLES
- UNEXPECTED COMBINATIONS OF MEASURED QUANTITIES

NOTE: PHOTOGRAPHY AS A TOOL

SOMETIMES ONE CAN'T MEASURE BUT THAT DOES NOT MEAN A RELIEF IN DOCUMENTATION

A SMALL UNCERTAINTY CALLS FOR...

- NICE AND CONTROLLED CONDITIONS
- LAW AND ORDER
- TOP INSTRUMENTS
- PRECISE CALIBRATION

BUT CAN ACCEPCT SOME
INCONVENIENCE, LOSS OF TIME ETC.

Layout of the romm free from mechanical vibrations and temperature oscilations.

A STABLE TEST ENVIRONMENT ?

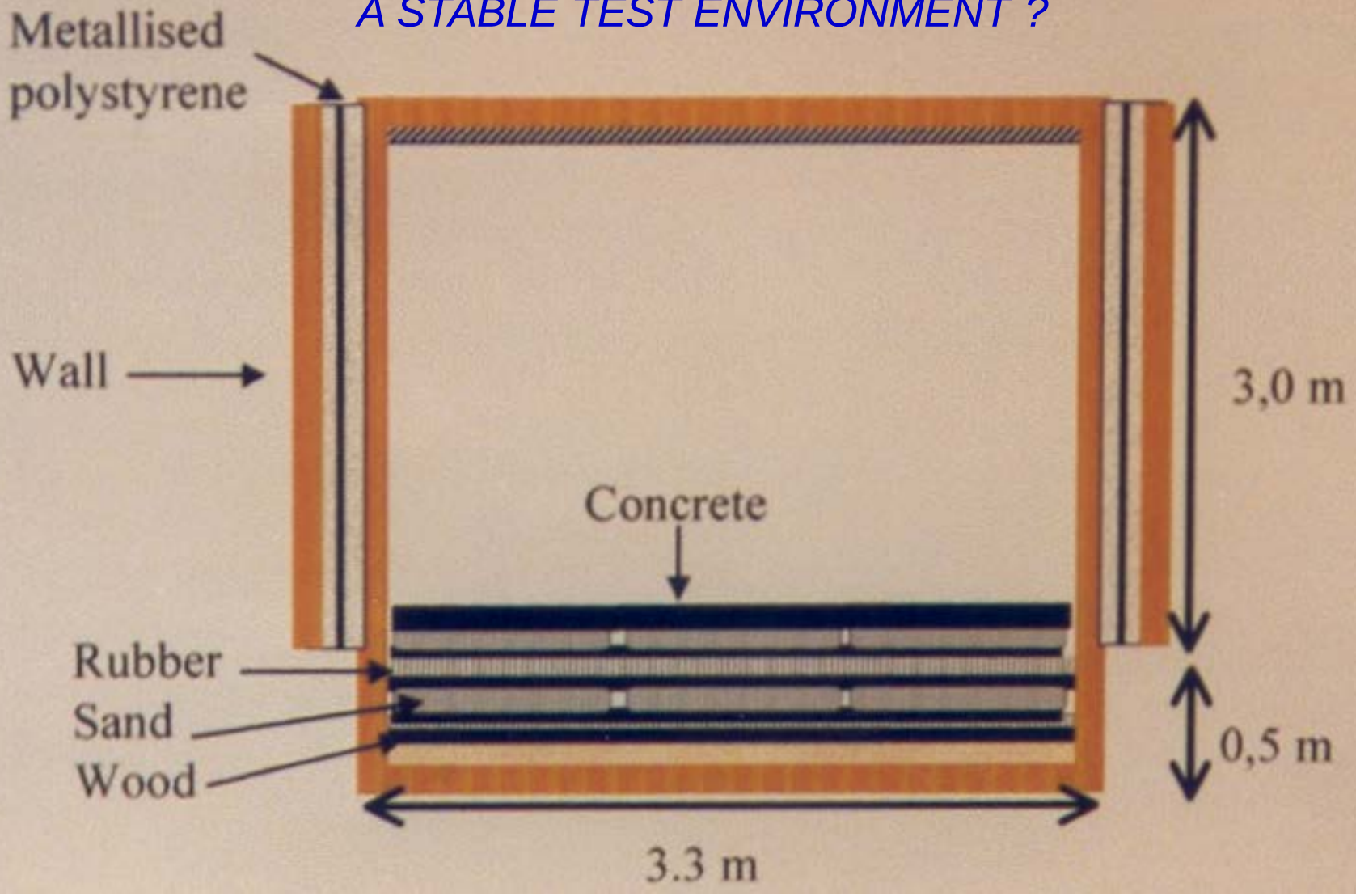

WHERE'S THAT MICROVOLT COMING FROM ?

IT IS NOT THAT WE DON'T KNOW HOW TO DO
BUT IT IS THAT WE THINK WE DON'T HAVE THE TIME

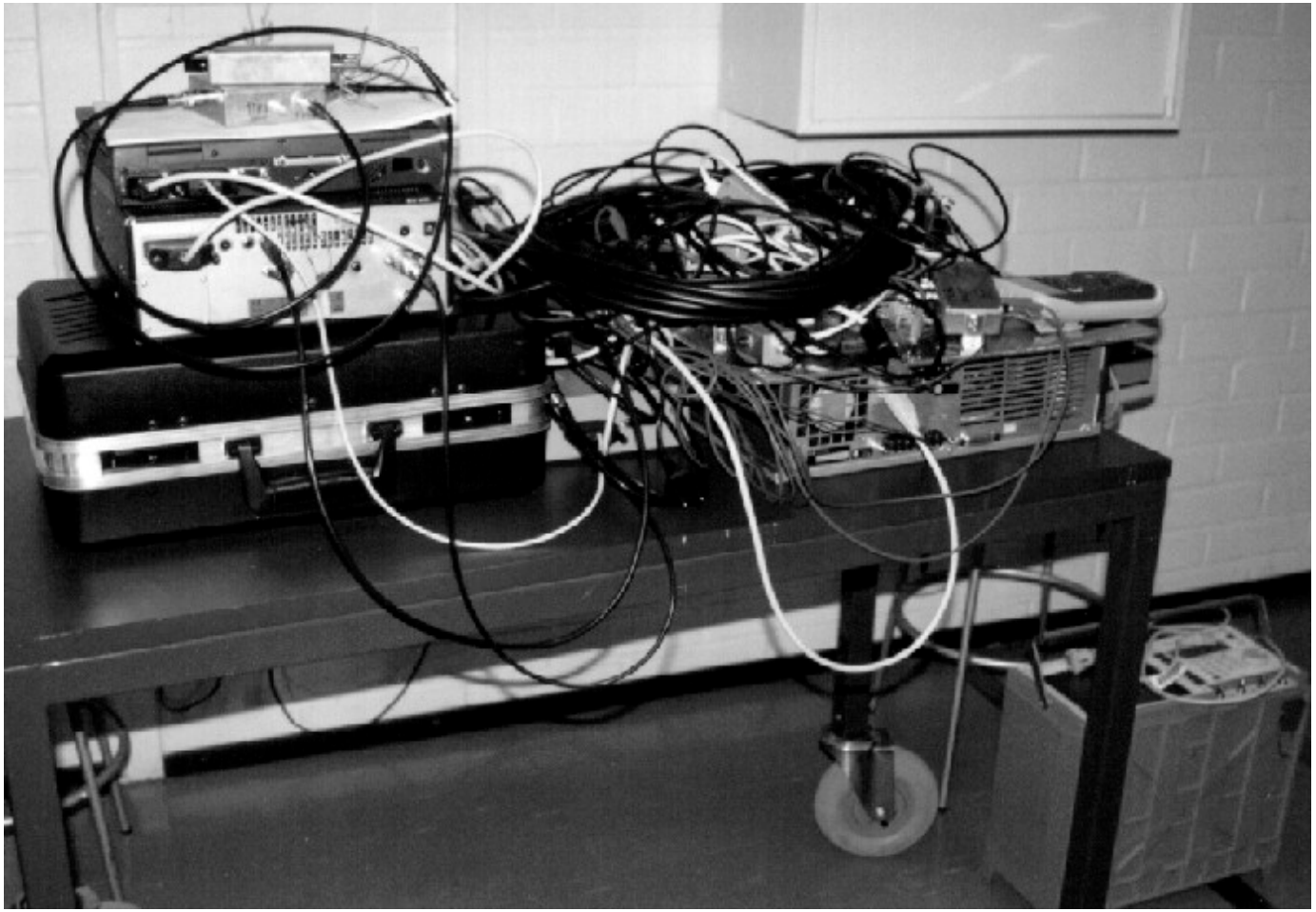

A PHOTO DIODE ARRAY HUSSLE

BUT THIS WORKS ANYHOW !

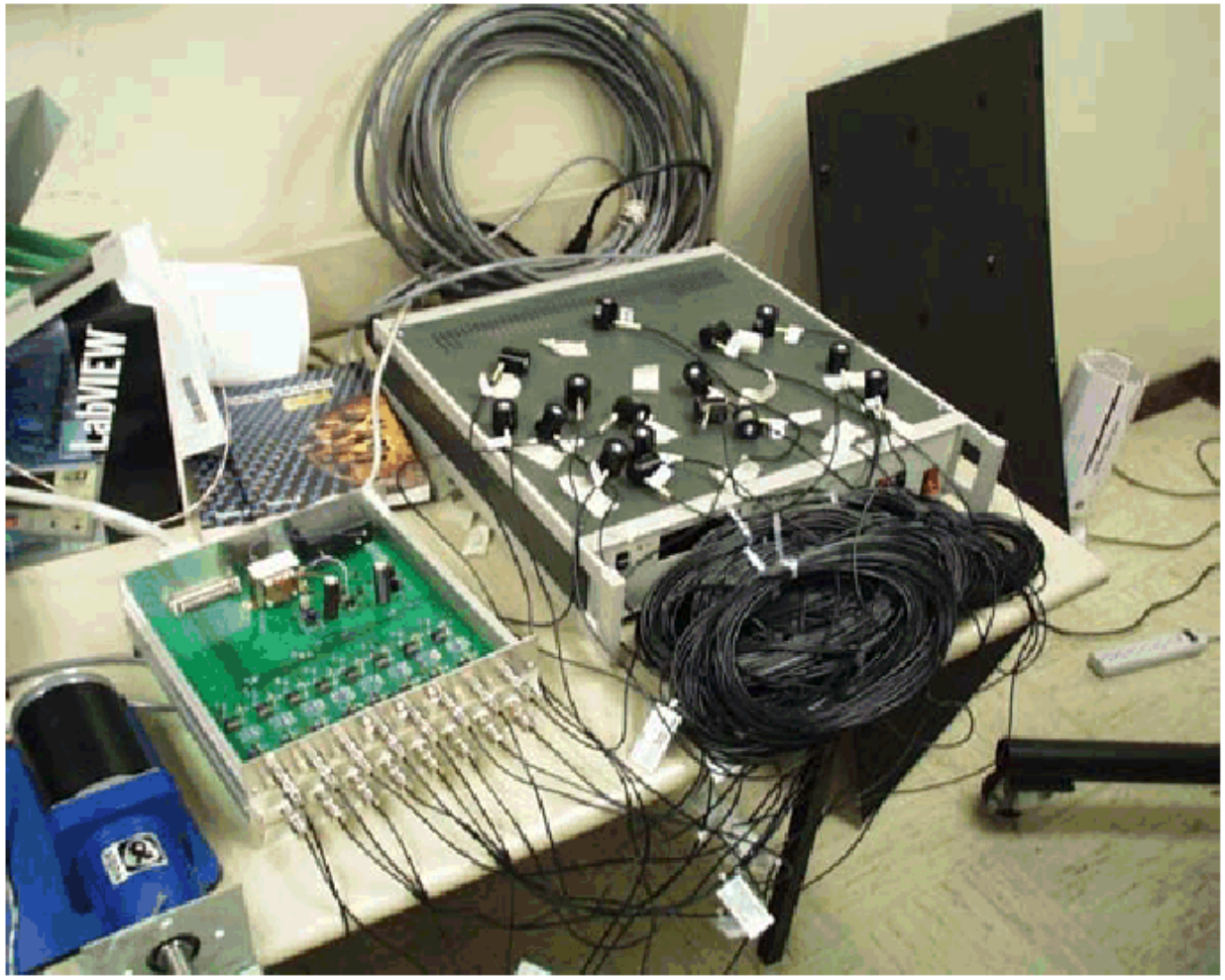

OPTIMIZING CABLE LENGTHS

YES, BUT DOESN'T THIS LOOK A BIT UNSTABLE ?

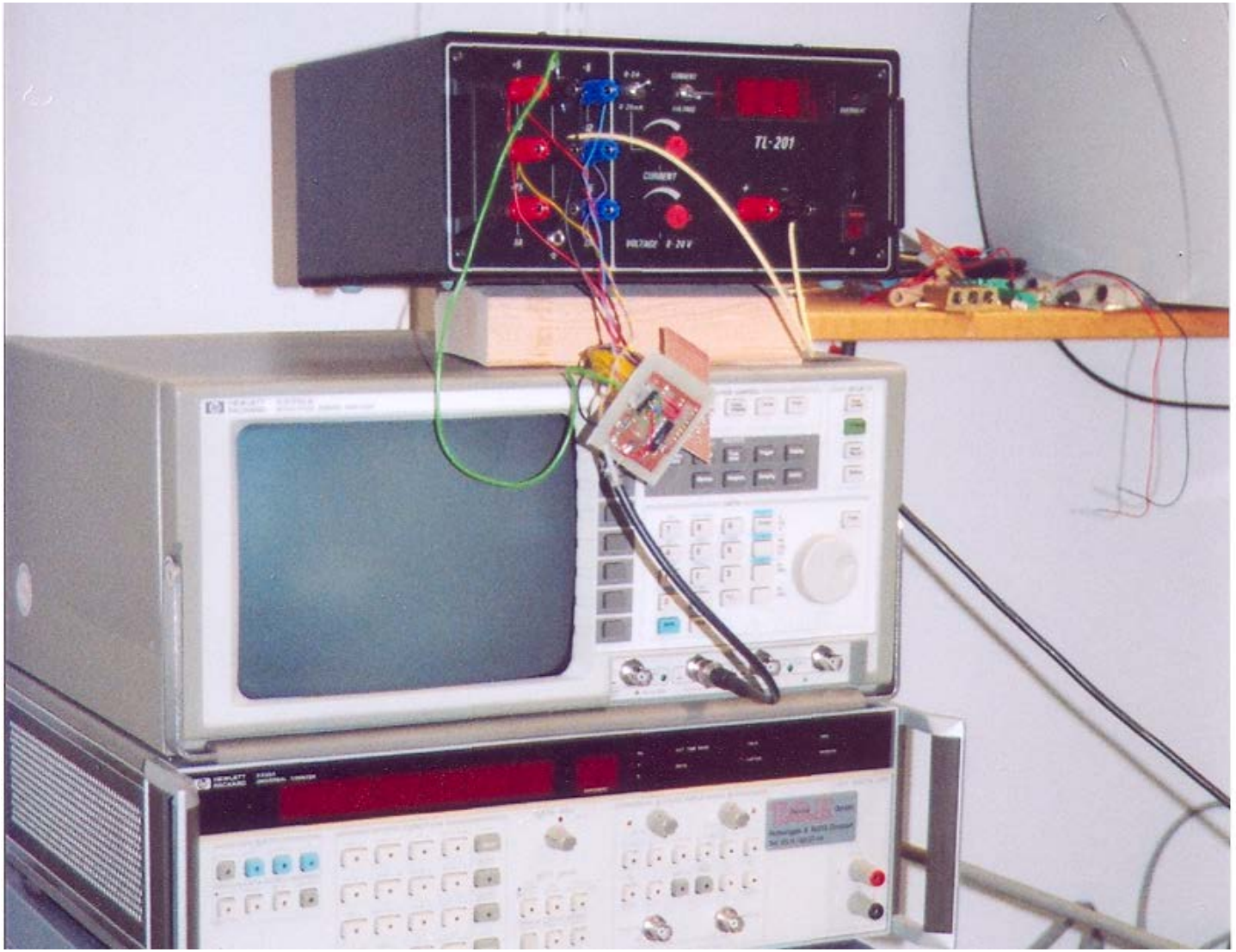

AT HIGH RF, WE HAVE ADDITIONAL CHALLENGES (E.G. DETECTOR LOAD CAPACITANCE)

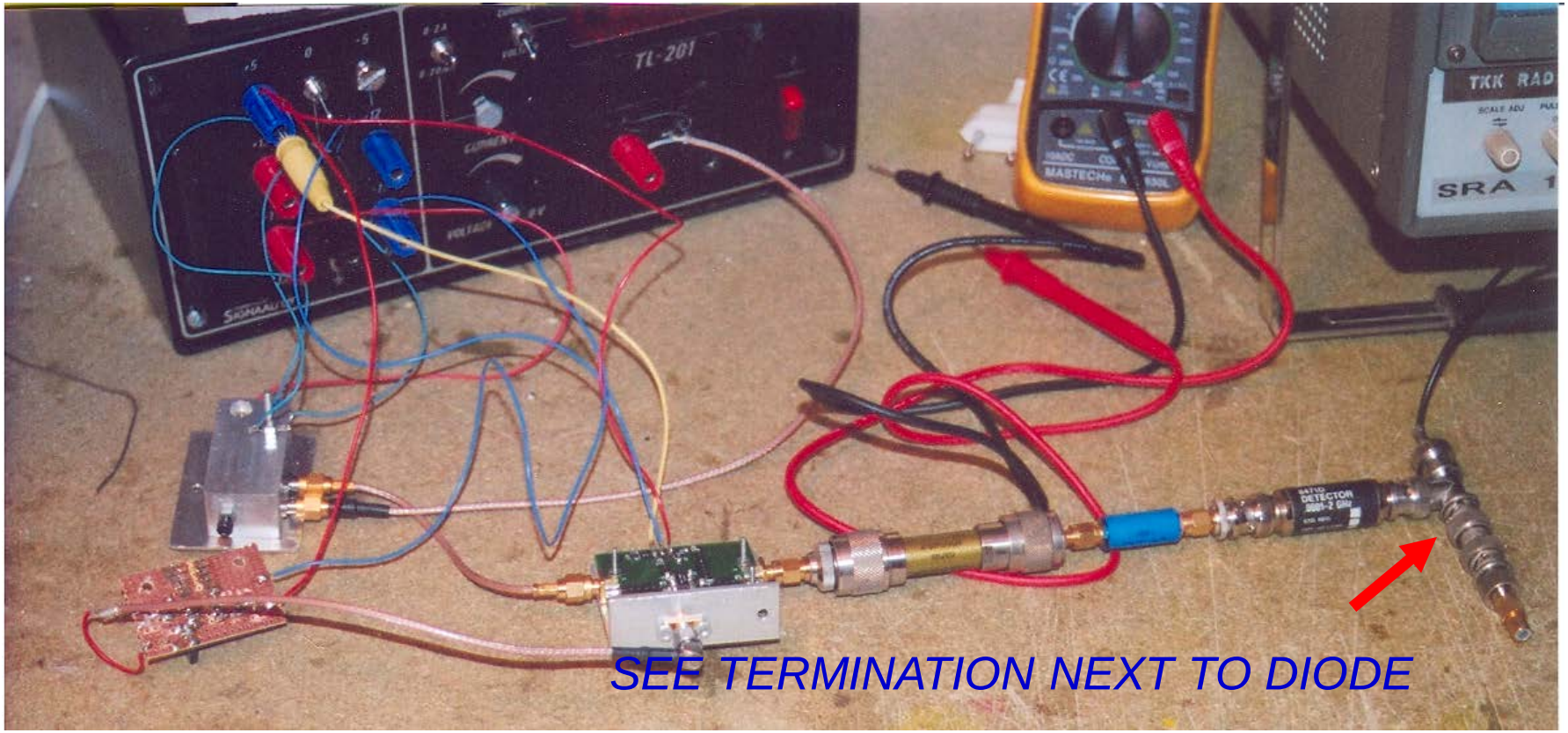

A SMALL DIFFERENCE...

CONNECTORS THAT MATE MECHANICALLY
BUT DON'T GIVE THE EXPECTED PERFORMANCE

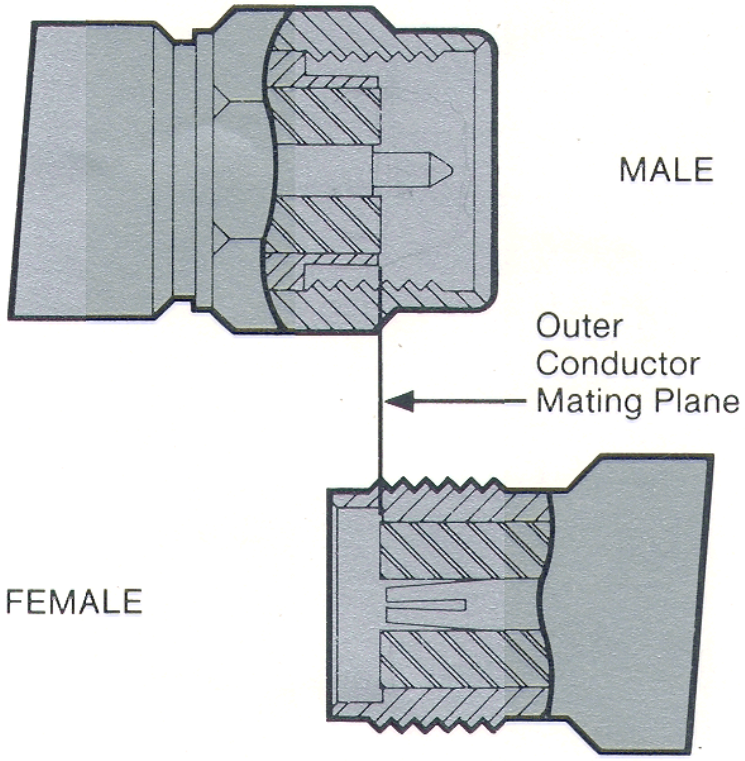

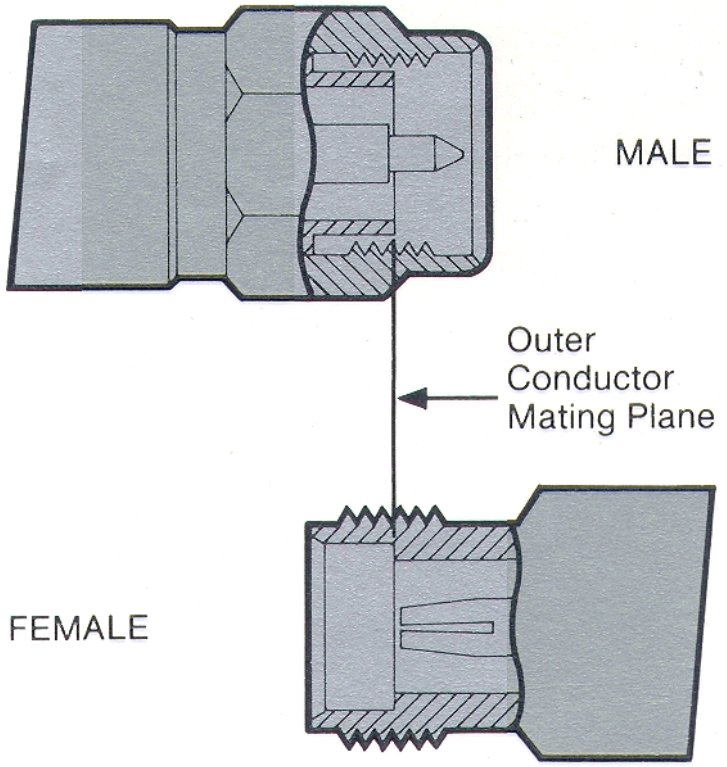

EXTREME CONDITIONS REQUIRE...

- DURABLE INSTRUMENTATION
- HARDENED SCIENTISTS
- FLUENT PROCEDURES

BUT GENERALLY ALLOW SOME INCREASE IN UNCERTAINTY

SMALL DETAILS CAN MAKE THE DIFFERENCE

WHO IS GOING TO TURN THE LOOP WHEN IT RAINS ?

OR DO WE JUST SAY IT IS ALIGNED ACCURATELY ENOUGH ?

GOING OUT, PART ONE

GETTING LOW UNCERTAINTY REQUIRES HERE EXTREME CARE AND PATIENCE

PART TWO

HOT

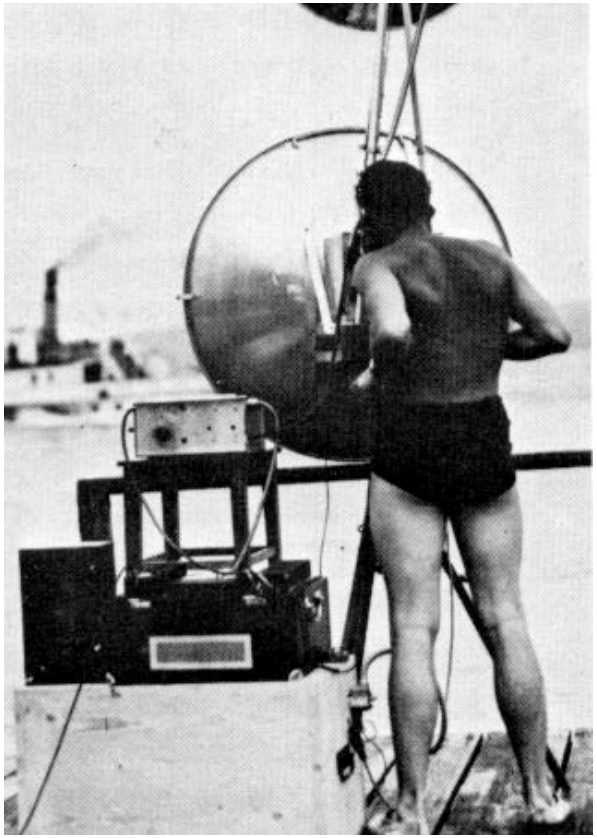

NOT SO HOT

GHOST BUSTERS ?

OFTEN NON-ESSENTIALS HAMPER PRECISION

NO, BUT A LOST SWITCH POSITION

HAVING A TORCH MIGHT NOT SOUND SCIENTIFIC
BUT IT IS MUCH EASIER TO SEE IF YOU GET LIGHT

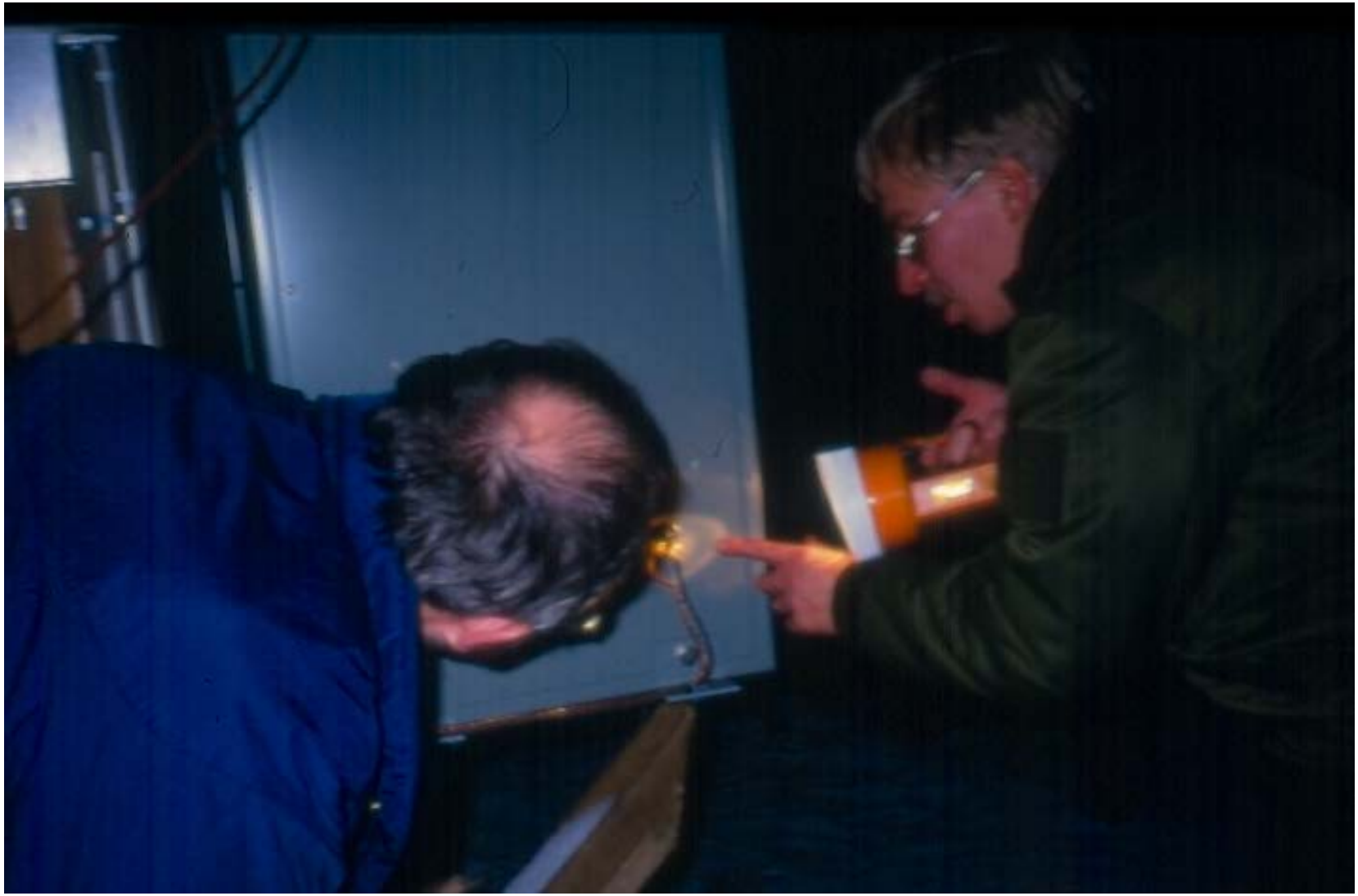

SOME USEFUL HARDWARE

WHEN (NOT IF) SOMETHING GOES WRONG

WHAT DO YOU DO WHEN THE MOUNTING DIMENSION IS 0.5 mm TIGHT ?

BEING PREPARED FOR ON-SITE ADJUSTMENTS

THE MORE COMPLICATED THE TEST SET-UP AND ARRANGEMENTS THE MORE WE NEED FACILITIES FOR RAPID TUNING

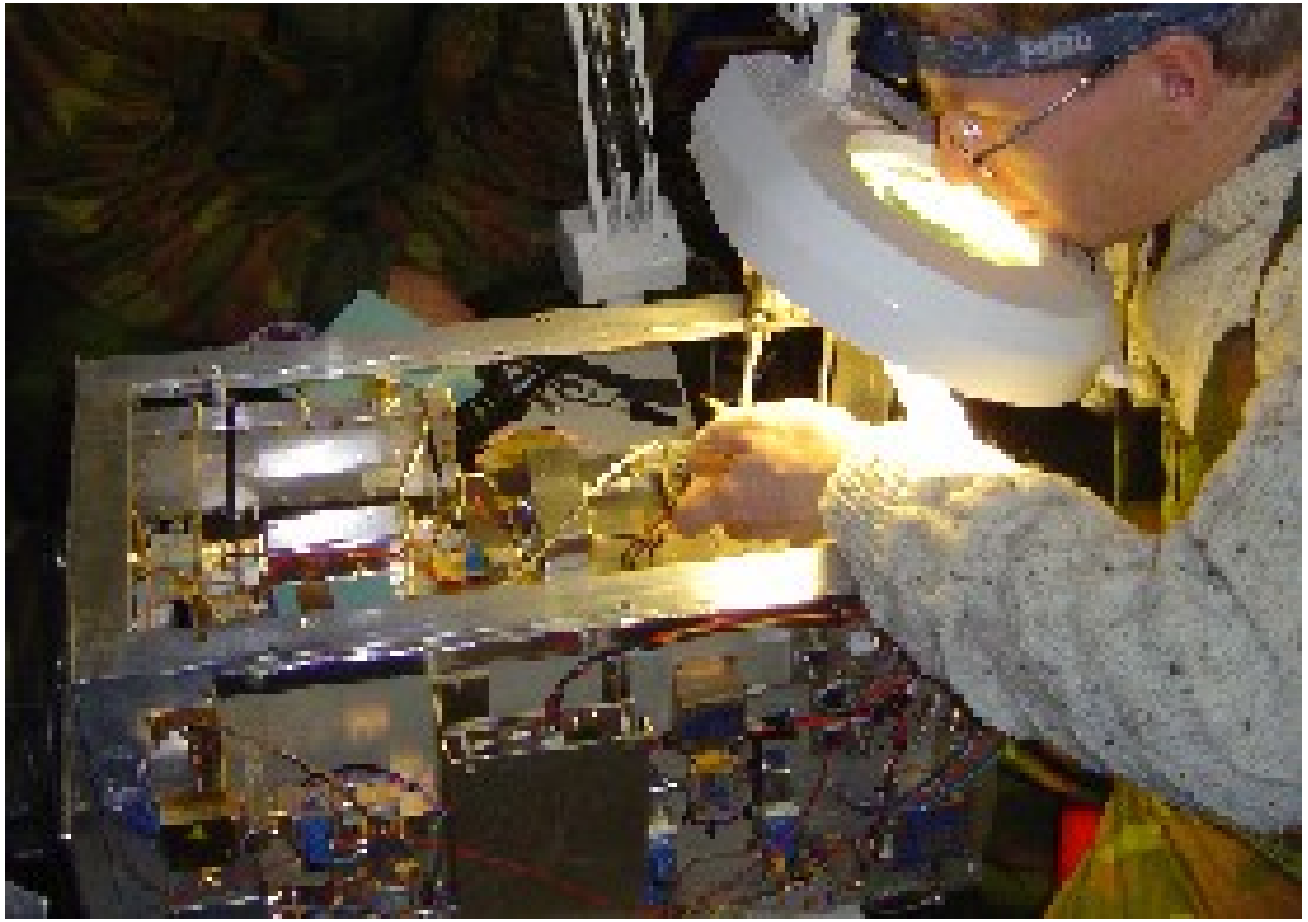

...AND REPAIRS

A LESS FORTUNATE CABLE RUN

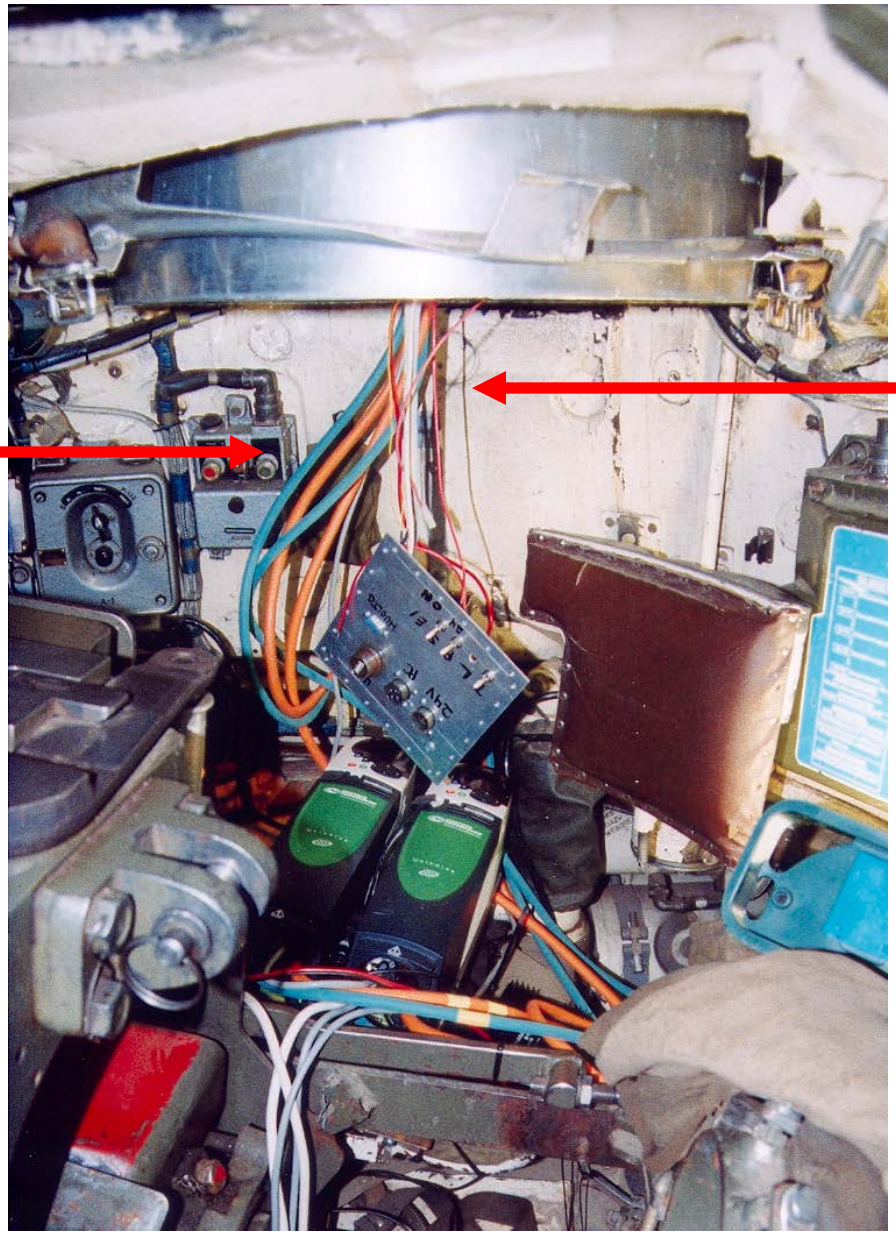

230 V AC
AT 3 kW

10 mV
SENSOR
SIGNAL

AN AIRBORNE PLATFORM

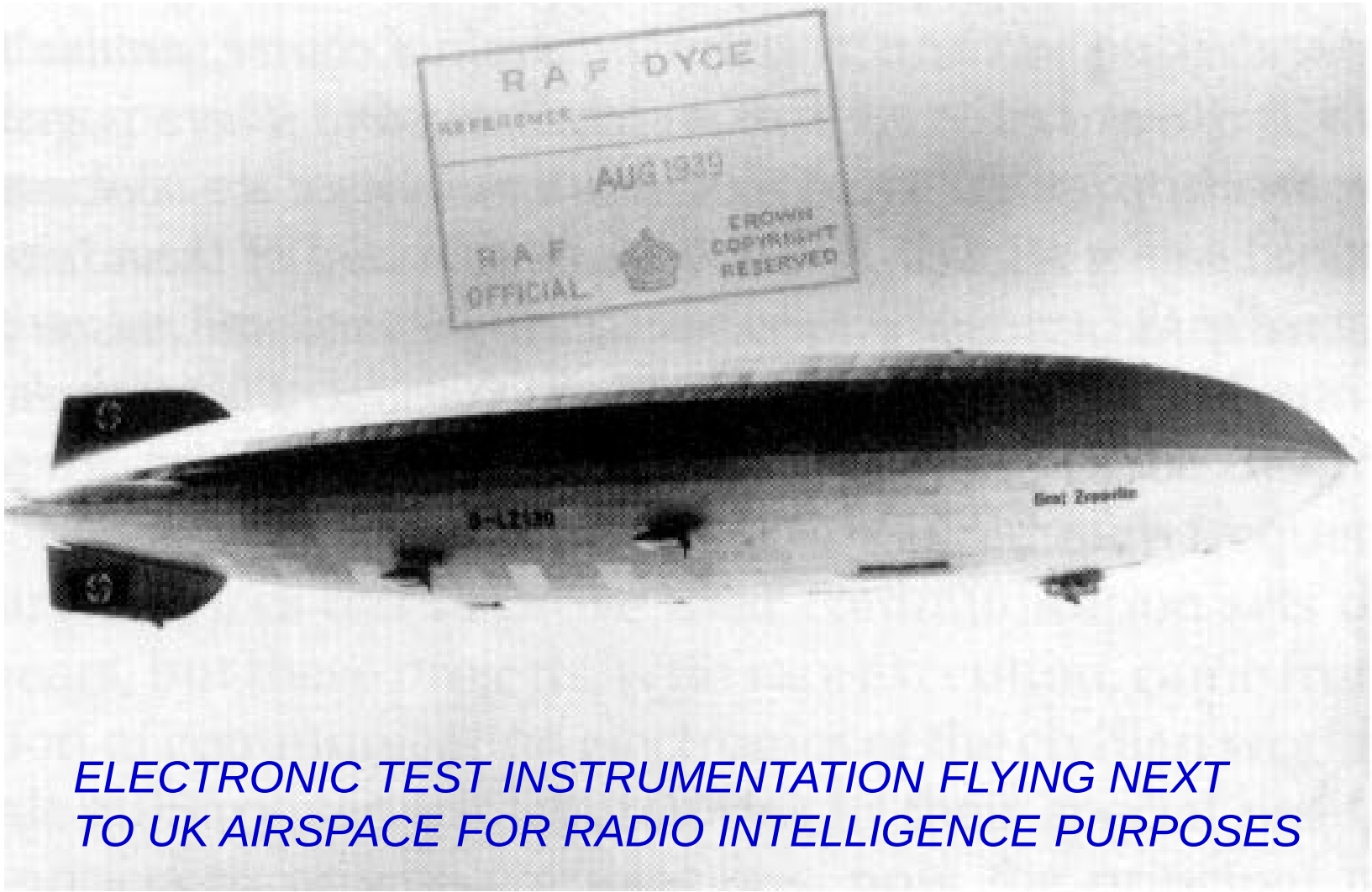

ELECTRONIC TEST INSTRUMENTATION FLYING NEXT TO UK AIRSPACE FOR RADIO INTELLIGENCE PURPOSES

AND AIRBORNE TEST GEAR

INSTRUMENTATION FOR METROLOGY-GRADE EVALUATIONS OF NAVIGATION SIGNALS IN REAL TIME

REDUCED-SIZE VERSION OF THE PREVIOUS

WAYS TO SOLVE UNREASONABLE OR IMPOSSIBLE CONDITIONS

- DATA LOGGING
  - RATHER SIMPLE
  - RISK OF LOOSING HUGE DATA SETS
  - MAY CREATE BUNDLES OF TRASH
- TELEMETRY & TELECOMMAND
  - A BIT TEDIOUS
  - LIVE CONTROL OF TEST
  - POSSIBLE CAPACITY PROBLEMS

A RECONNAISANCE VEHICLE

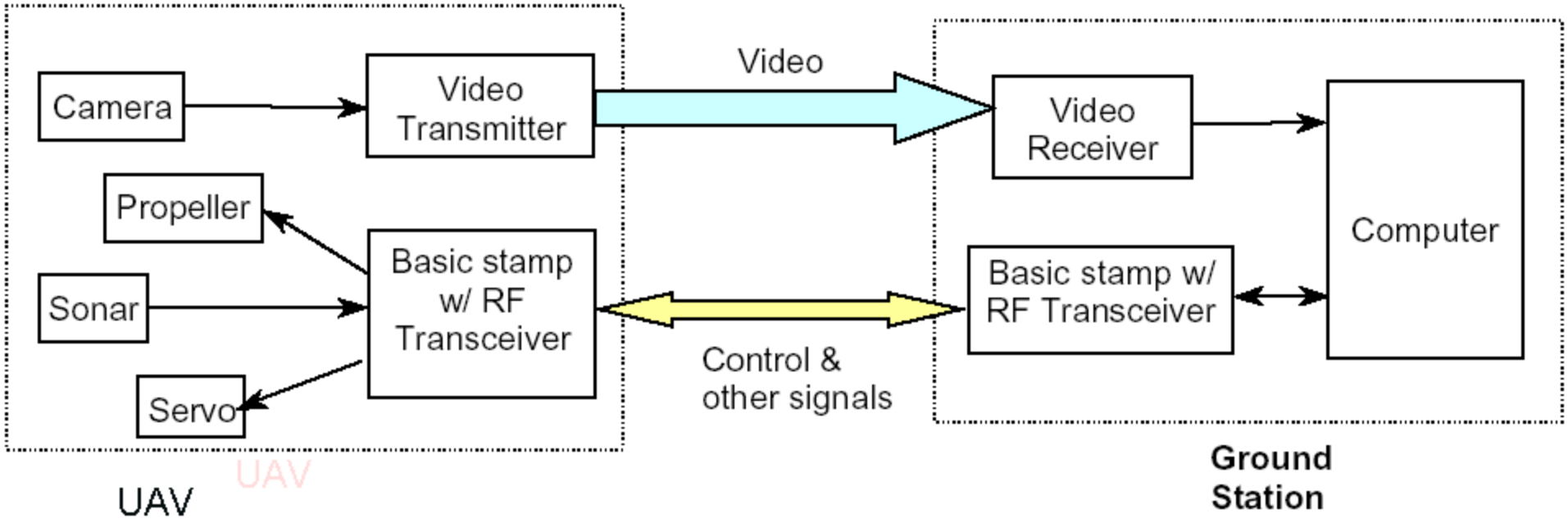

TELEMETRY

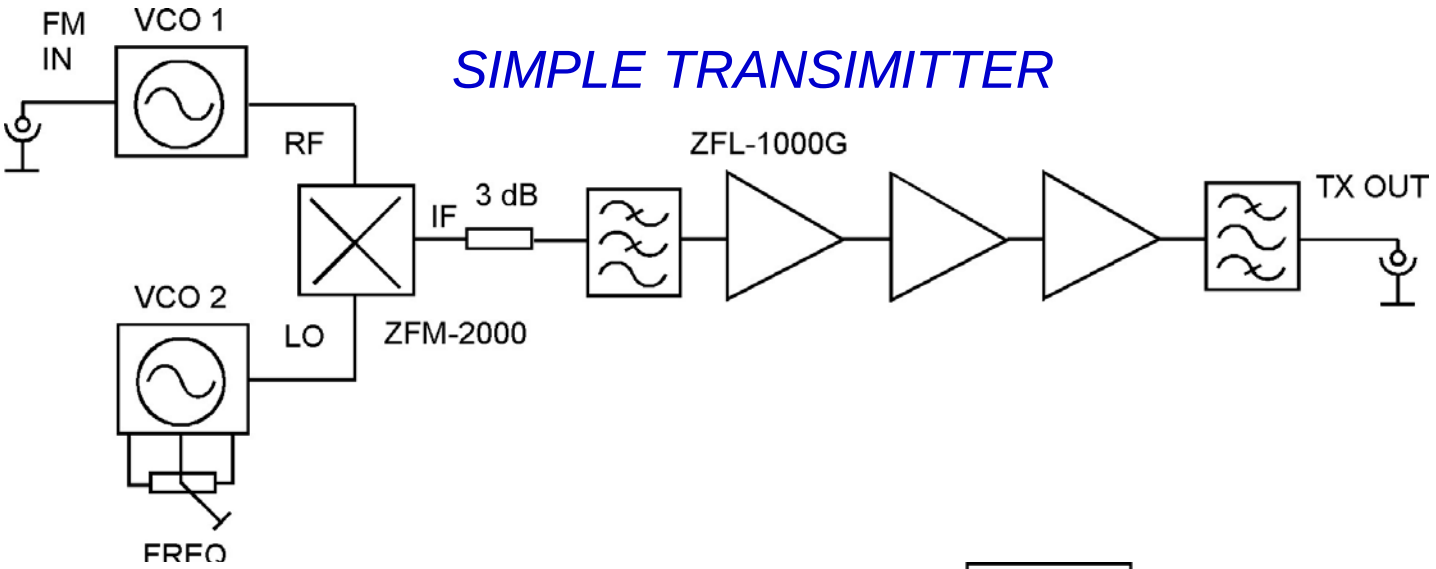

SIMPLE TRANSIMITTER

RECEIVER WITH AGC

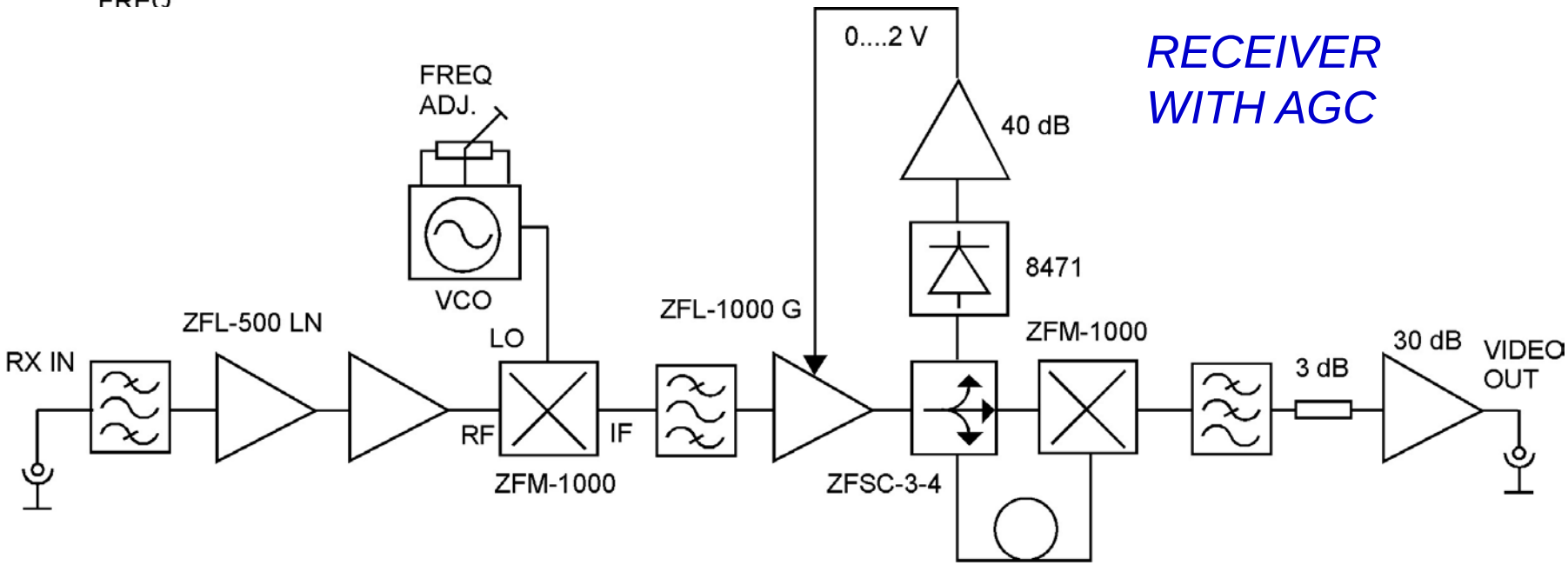

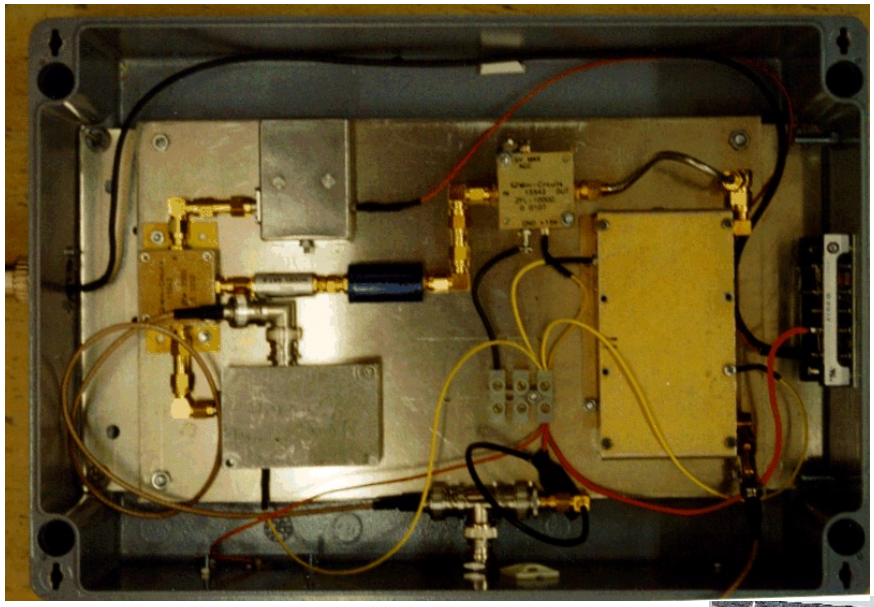

TRANSMITTER

RECEIVER

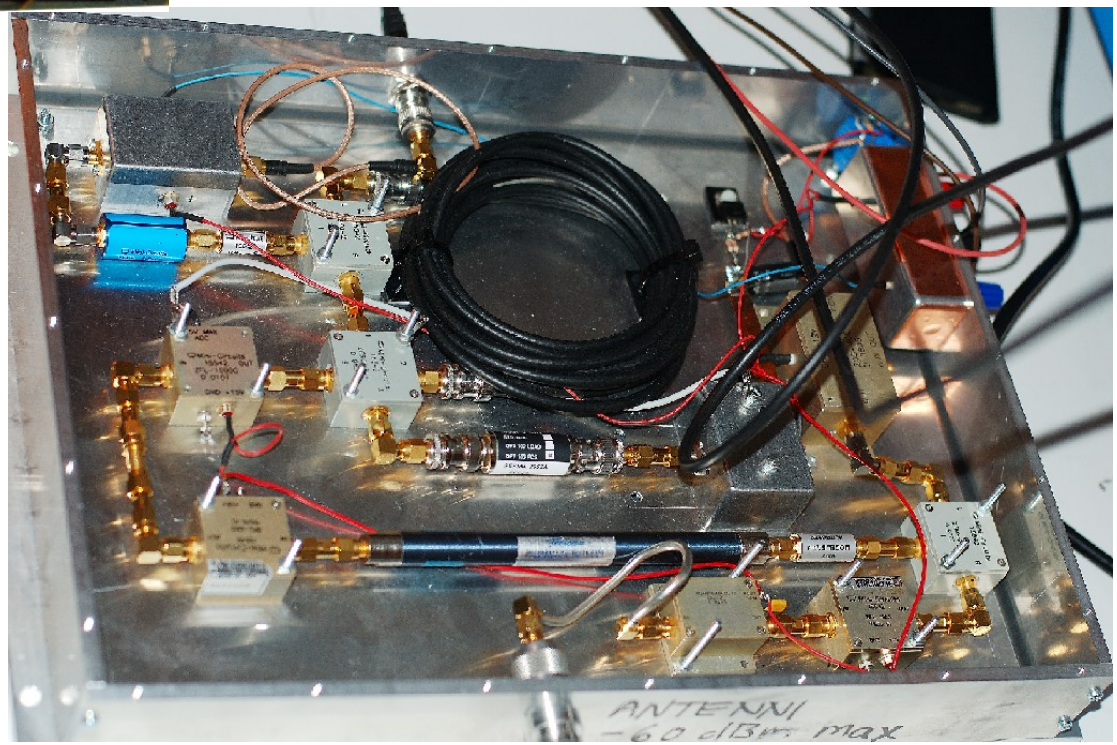

TELEMTERY IN FIELD USE

MEASUREMENTS FROM MOTOR AXIS INSIDE

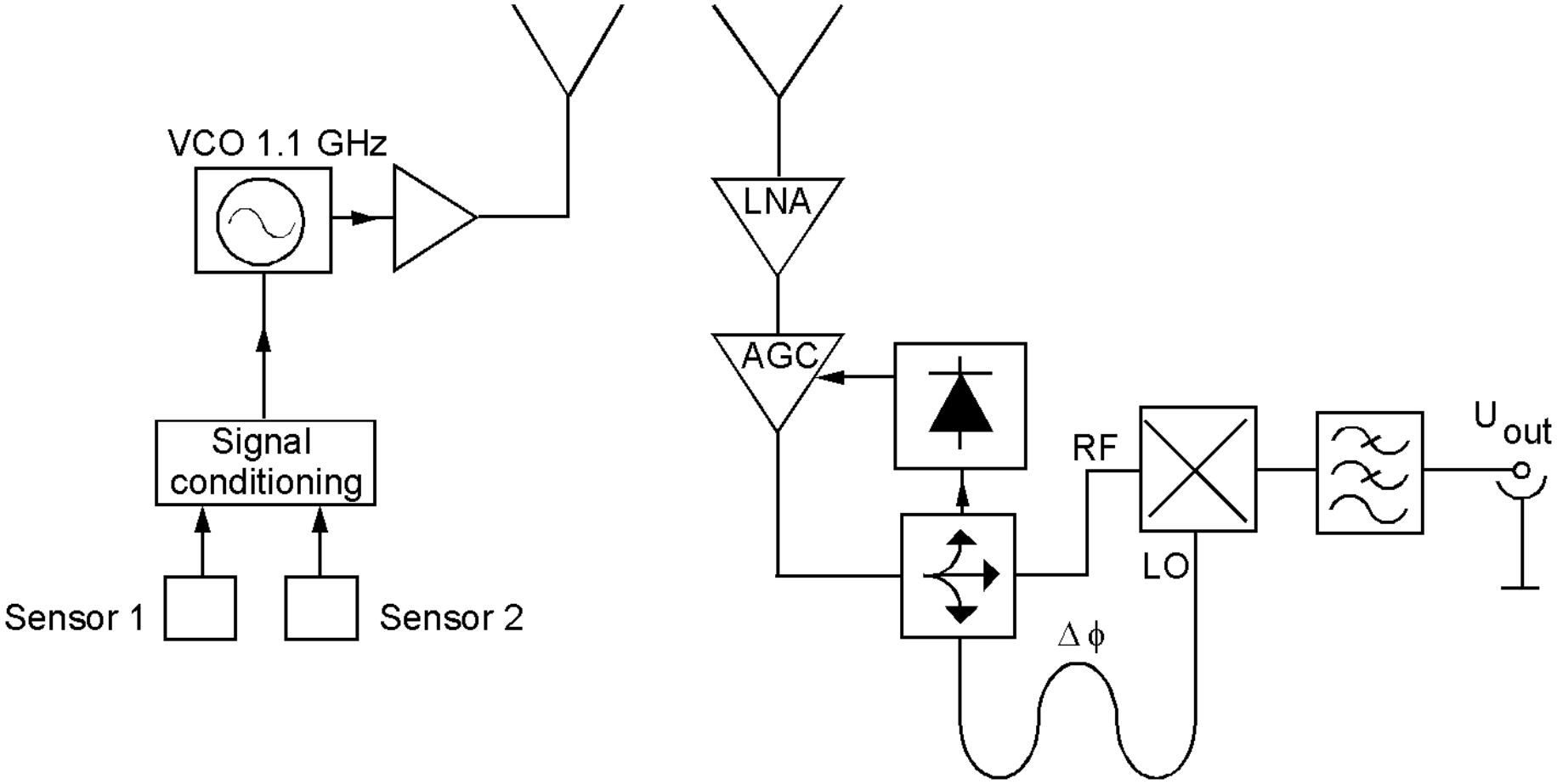

MECHANICAL LAY-OUT

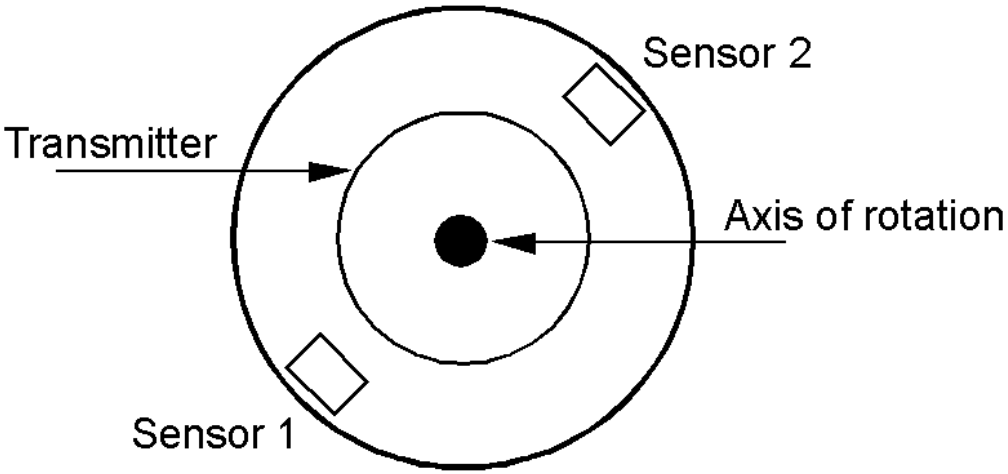

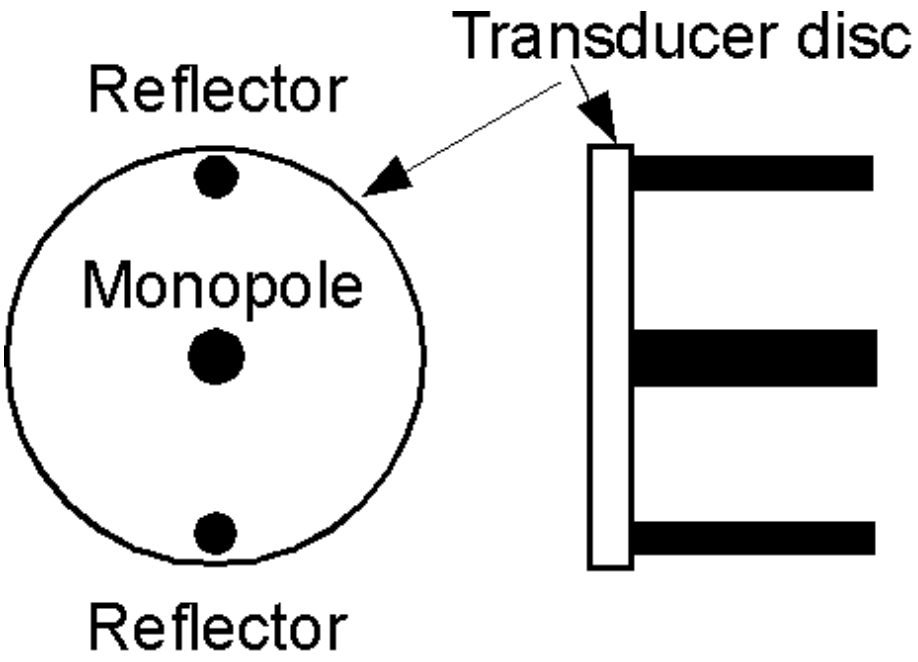

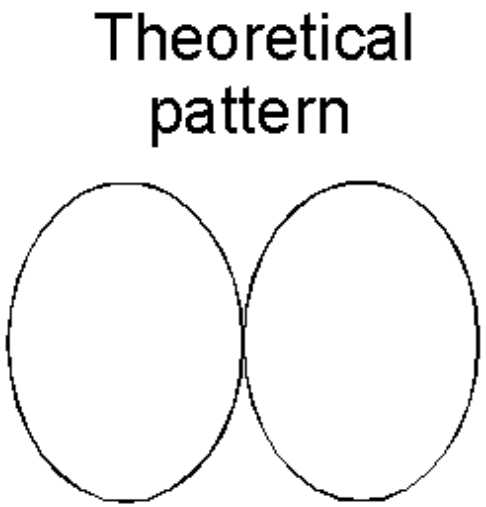

OPTICAL TELEMETRY

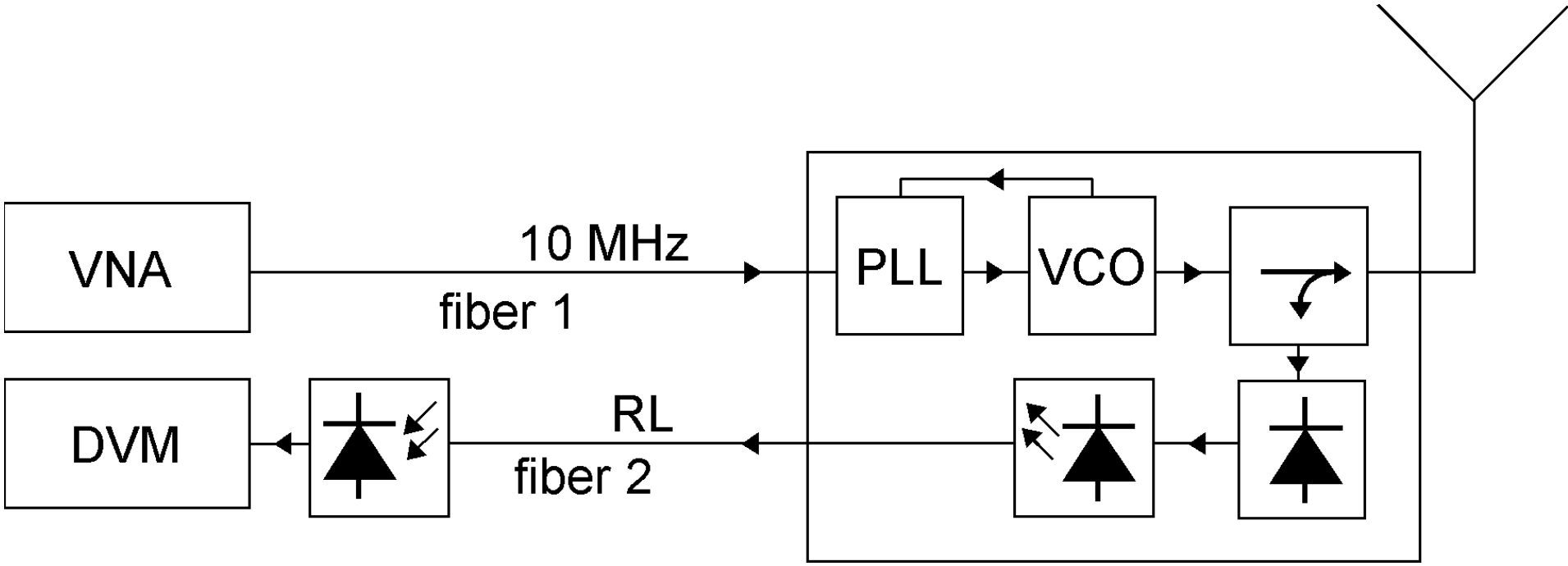

SMALL UNIT ON
ROTATING PLATFORM

OR LIKE THIS

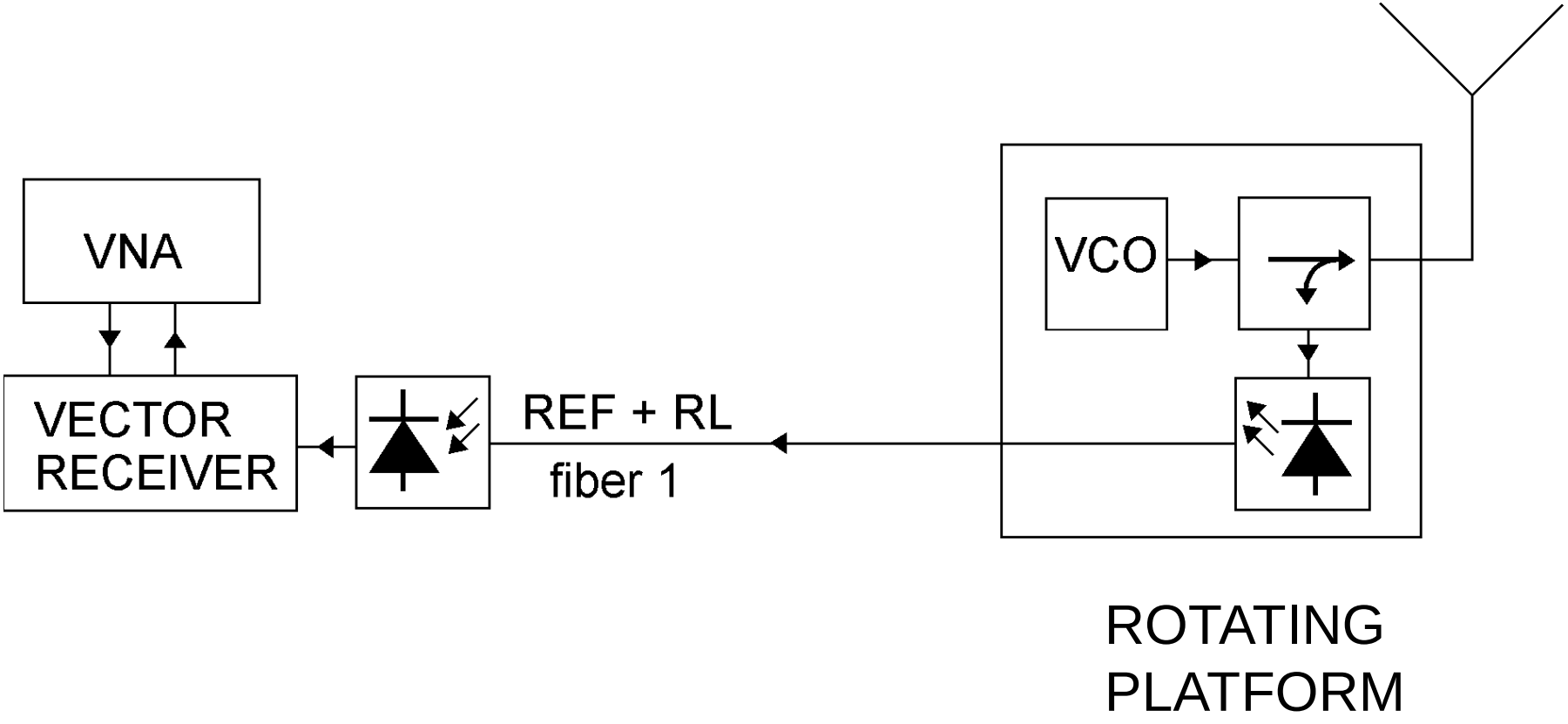

SPECTRUM AT FULL BASEBAND INPUT

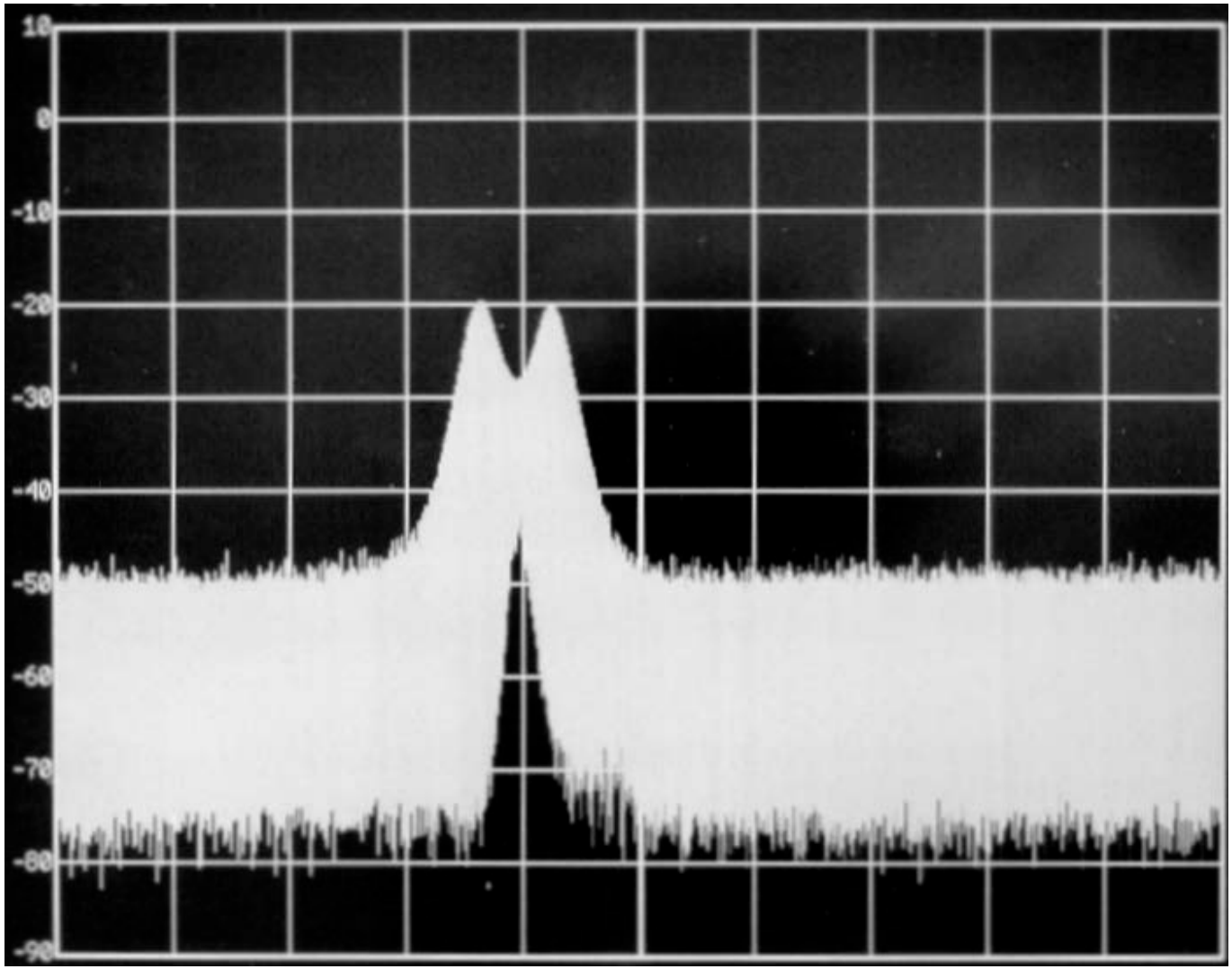

SEE SEPARATE ARTICLE FIELD_TEST.PDF FOR FURTHER INFORMATION ABOUT PRACTICAL PROBLEMS ”OUT THERE”

NEW PHYSICS MEANS...

- NOVEL TEST INSTRUMENTATION
- CONTROLLED CONDITIONS
- TRIAL AND ERROR
- HUGE COSTS

AND CAN CAUSE A NERVOUS BREAKDOWN

SOME KEY FACTORS

- TRYING TO REMOVE ALL OR MOST OF DISTURBING EFFECTS
  - TEMPERATURE
  - MECHANICAL VIBRATIONS
  - PRESSURE
  - ELECTROMAGNETIC INTERFERENCE
  - EARTH'S GRAVITATIONAL BIASES
- GETTING A SOLID UNDERSTANDING OF THE PRINCIPAL PHENOMENA

MEASURING LOG PROPERTIES ELECTRONICALLY

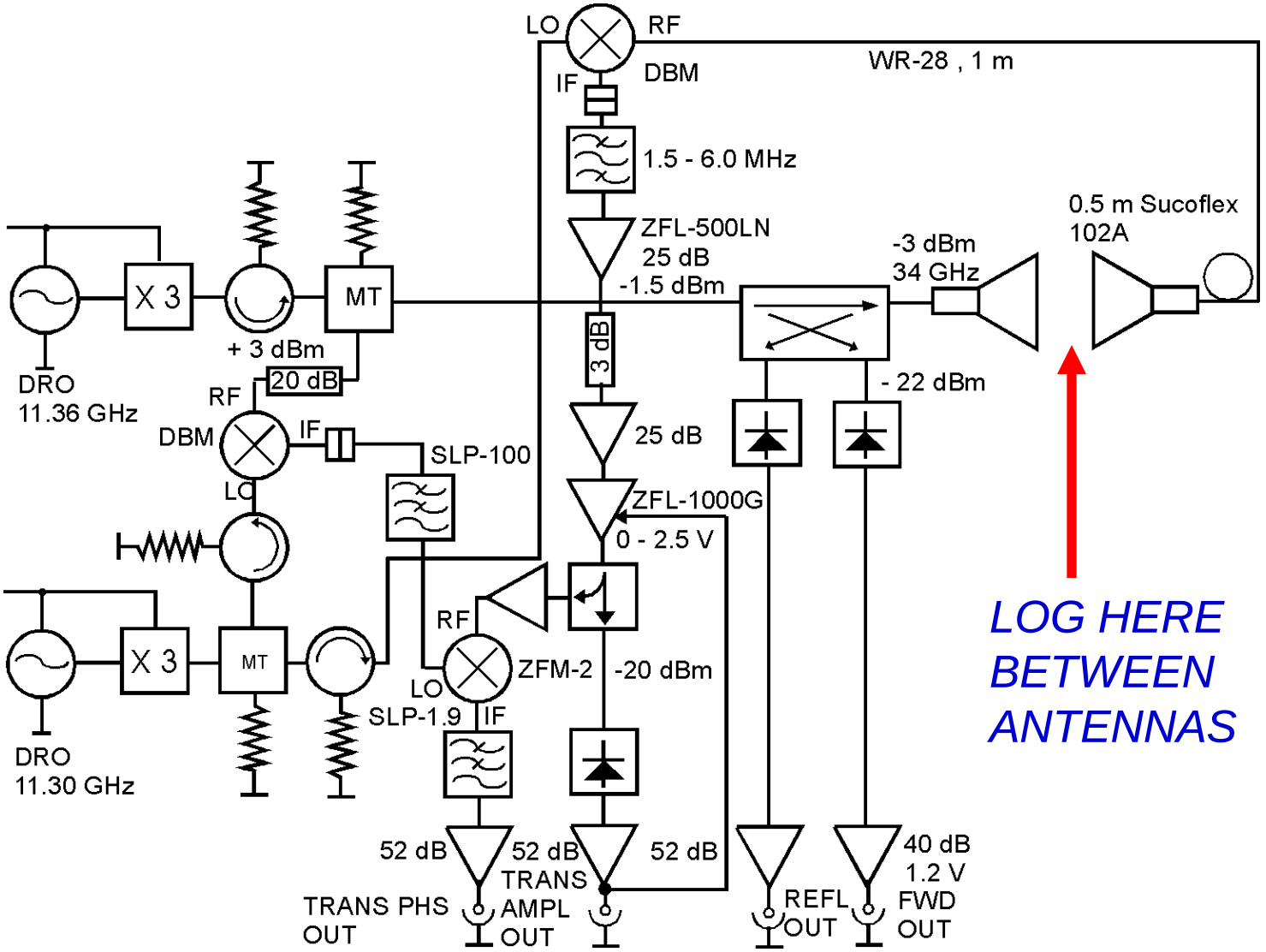

CONCEPT EVALUATION

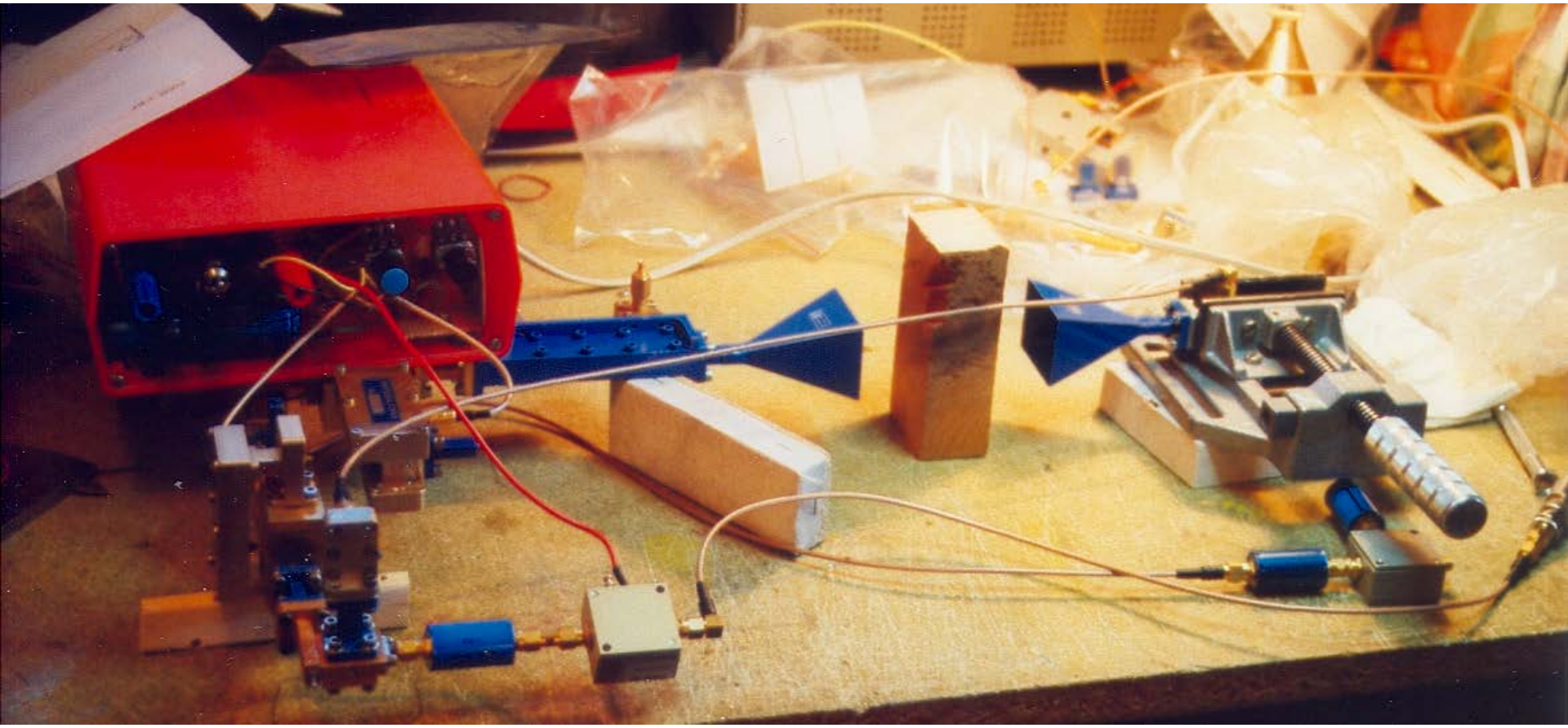

TAKING ONLY THE CONCEPT-VITAL BLOCKS TO SIMPLFY TESTING OF THE IDEA

FULL-SCALE TEST GEAR

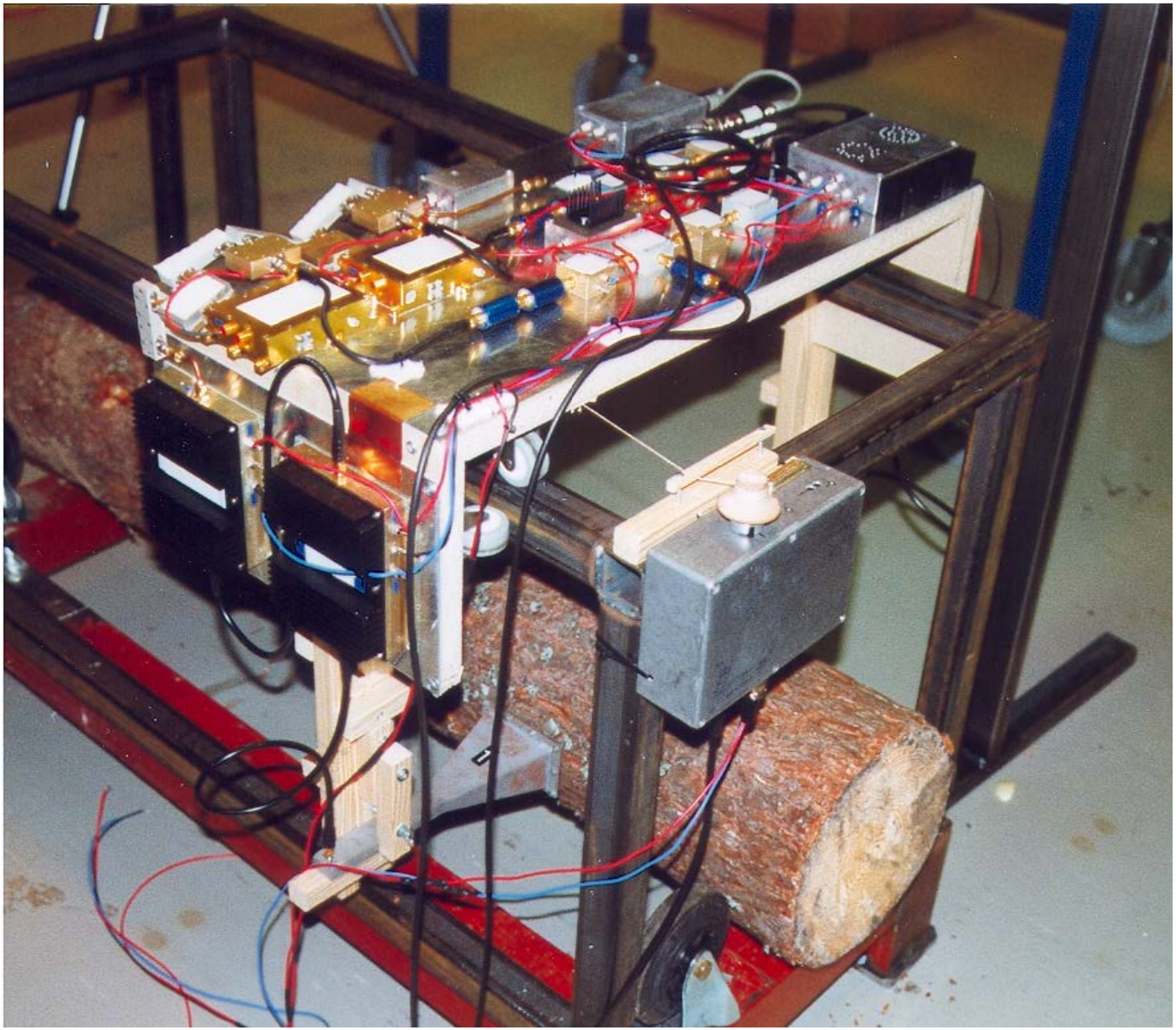

CONFIRMING RESULTS

SOME ADDED STABILITY IN THE FINAL VERSION

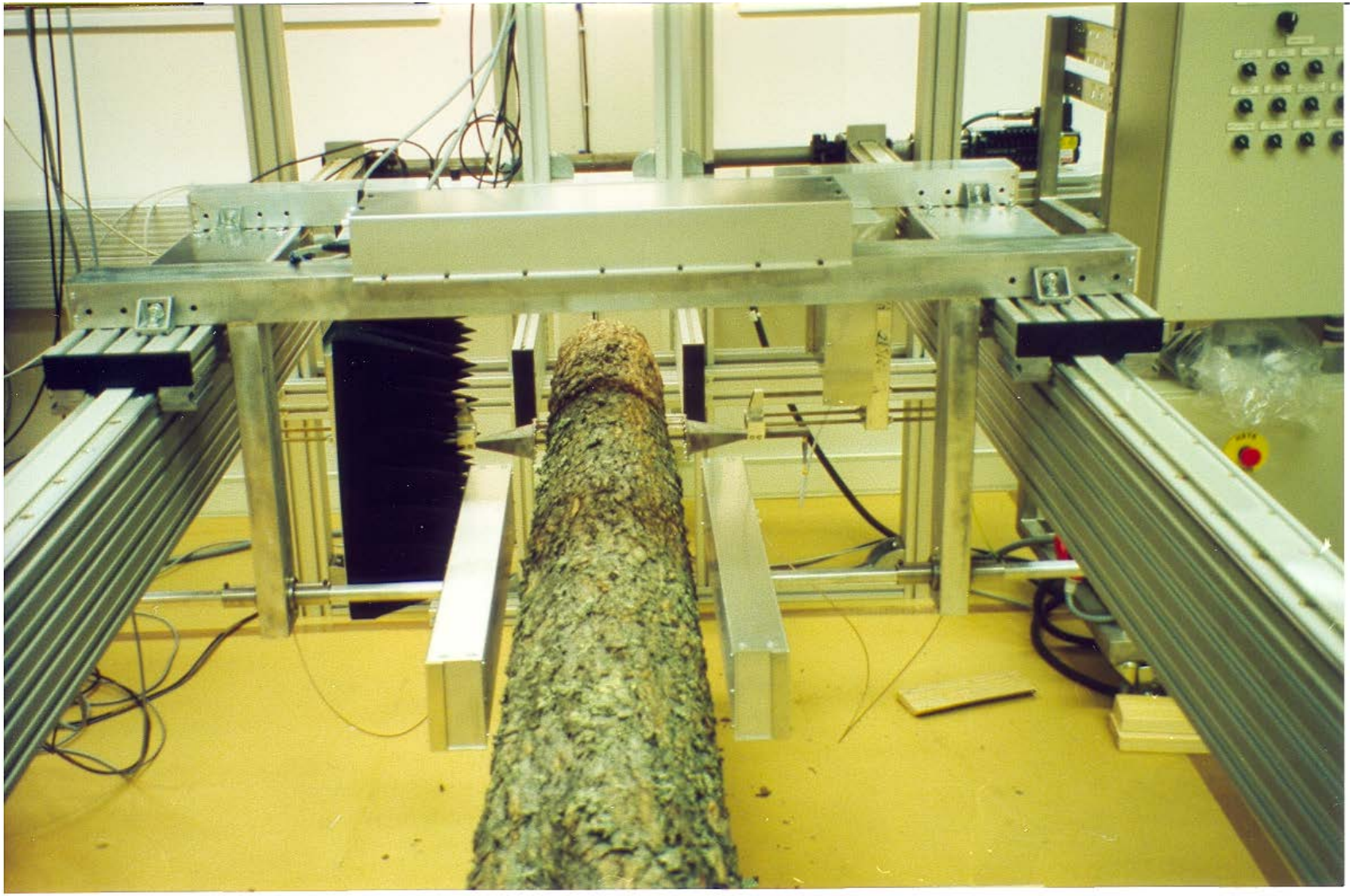

RF SHIELDING AT 35 GHz WITH 154 SCREWS

CERTAINLY NOT SUITABLE FOR MASS PRODUCTION
BUT GIVES THE DESIRED LEVEL OF UNCERTAINTY

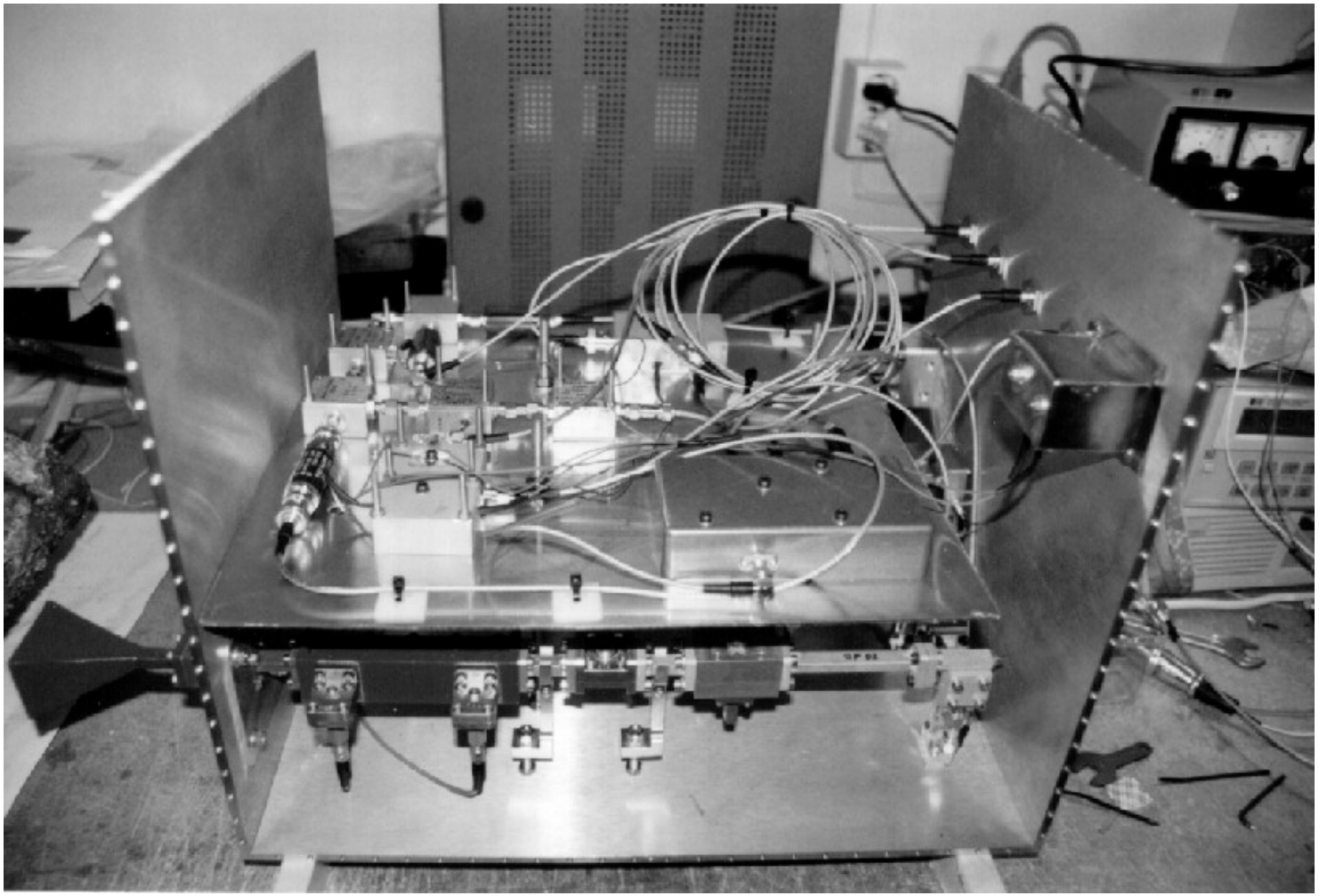

LECTURE TWO

STANDARDS AND TRACEABILITY

- PRIMARY STANDARDS
- SECONDARY STANDARDS
- WORKING STANDARDS

A CONTINUOUS DOWN-TOP CHAIN OF SUCCESSIVE DOCUMENTED CALIBRATIONS

PRIMARY STANDARDS

- FOR FUNDAMENTAL **SI** UNITS (MASS, LENGTH, FREQUENCY, CURRENT...)
- CONSTRUCTED AND MAINTAINED ACCORDING TO THE BEST KNOWN SCIENTIFIC AND ENGINEERING PRACTICES AND SKILLS
- NOT AVAILABLE COMMERCIALLY
- VERY IMPRACTICAL TO USE IN NORMAL R&D LABORATORY WORK
- INTERNATIONAL AND NATIONAL PRIMARIES, OCCASIONALLY ALSO INSTITUTIONAL (E.G. US NAVAL OBSERVATORY, AGILENT TECHNOLOGIES)

AN EXAMPLE OF UNCERTAINTY BUDGET (SI SECOND)

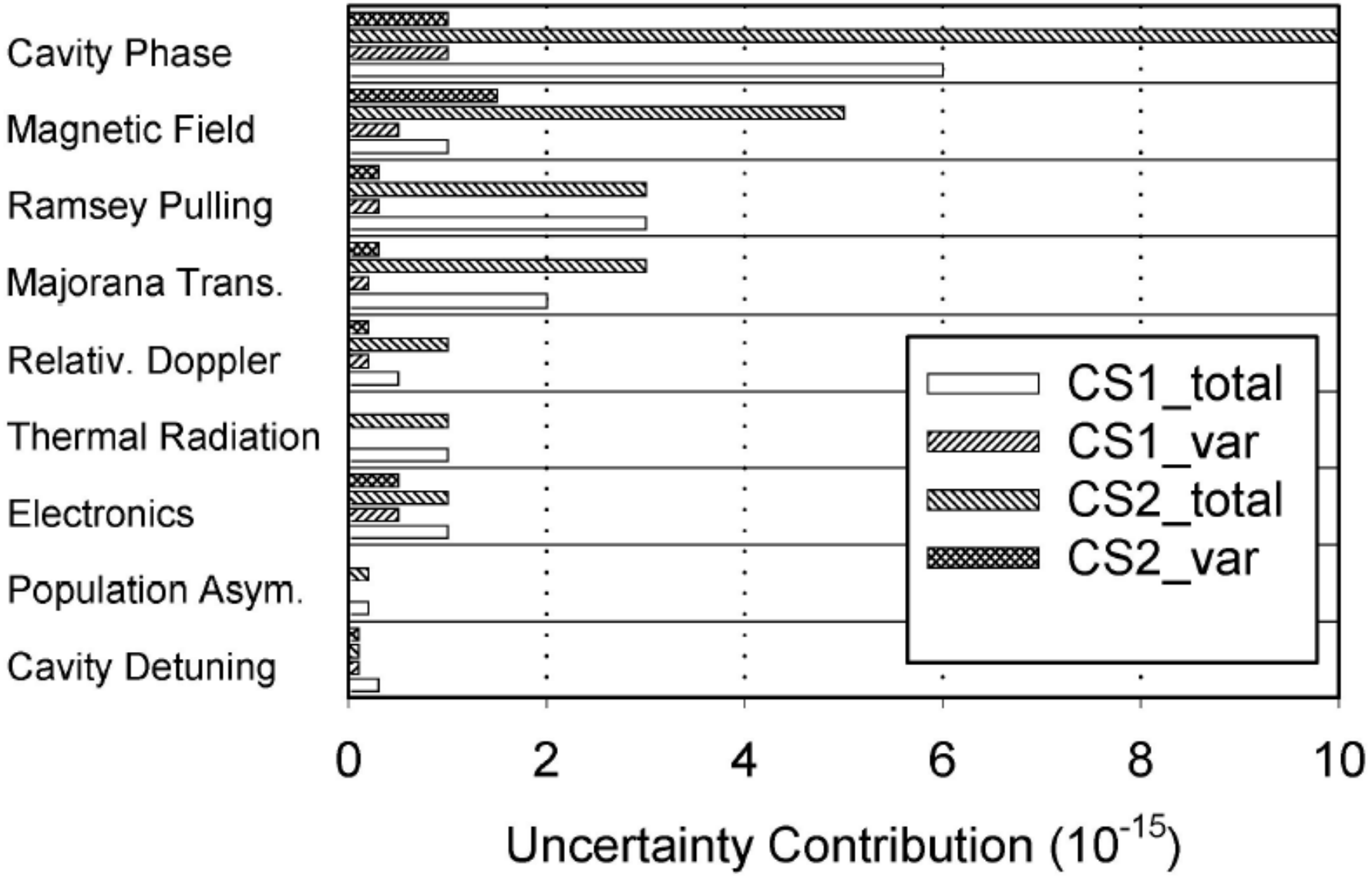

SEE MORE ABOUT THIS TOPIC IN THE SEPARATE ARTICLE CESIUM.PDF

ISS PRIMARY FREQUENCY STANDARD

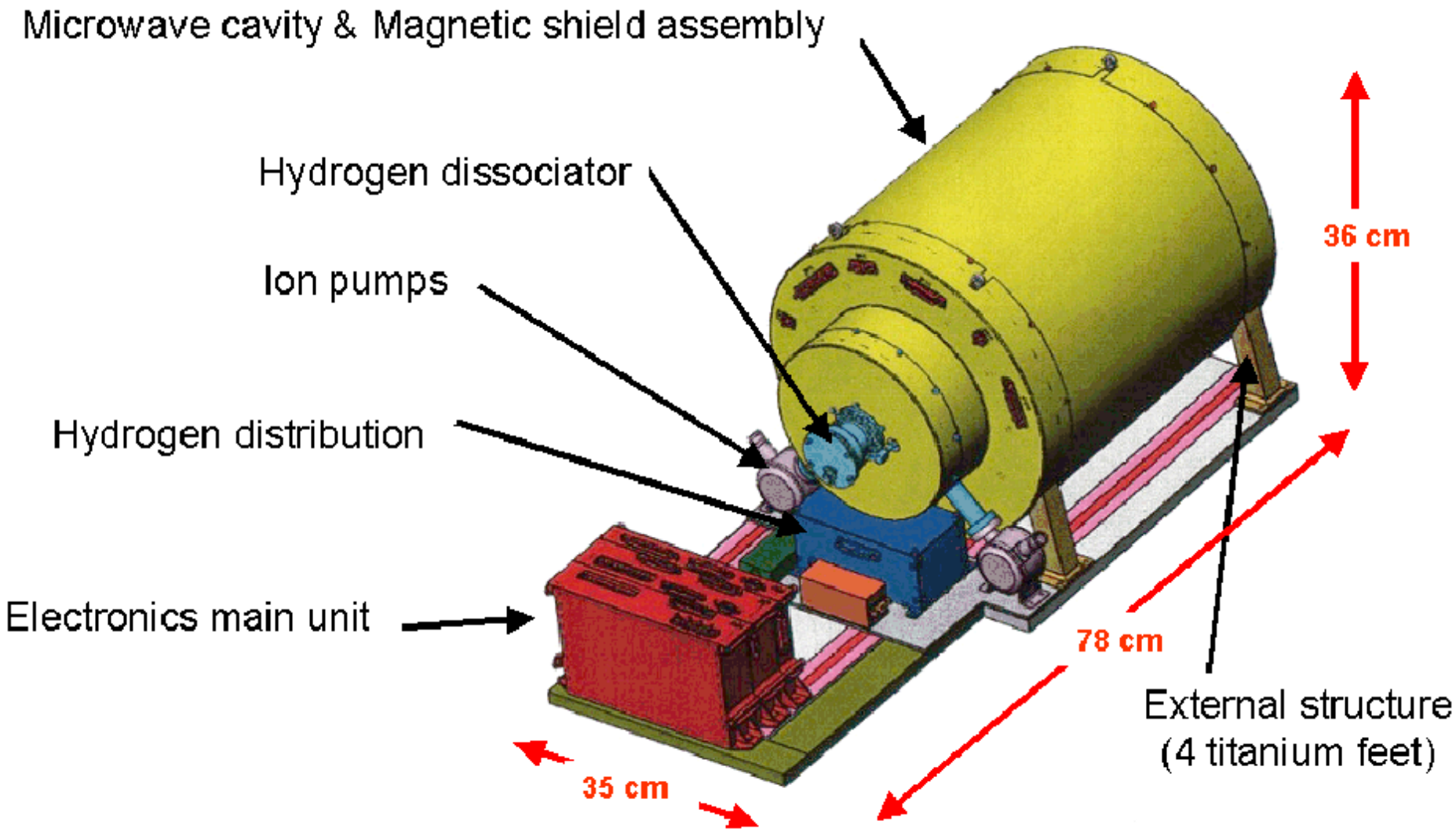

SHM-35 instrument overview

...AND ITS SPECS

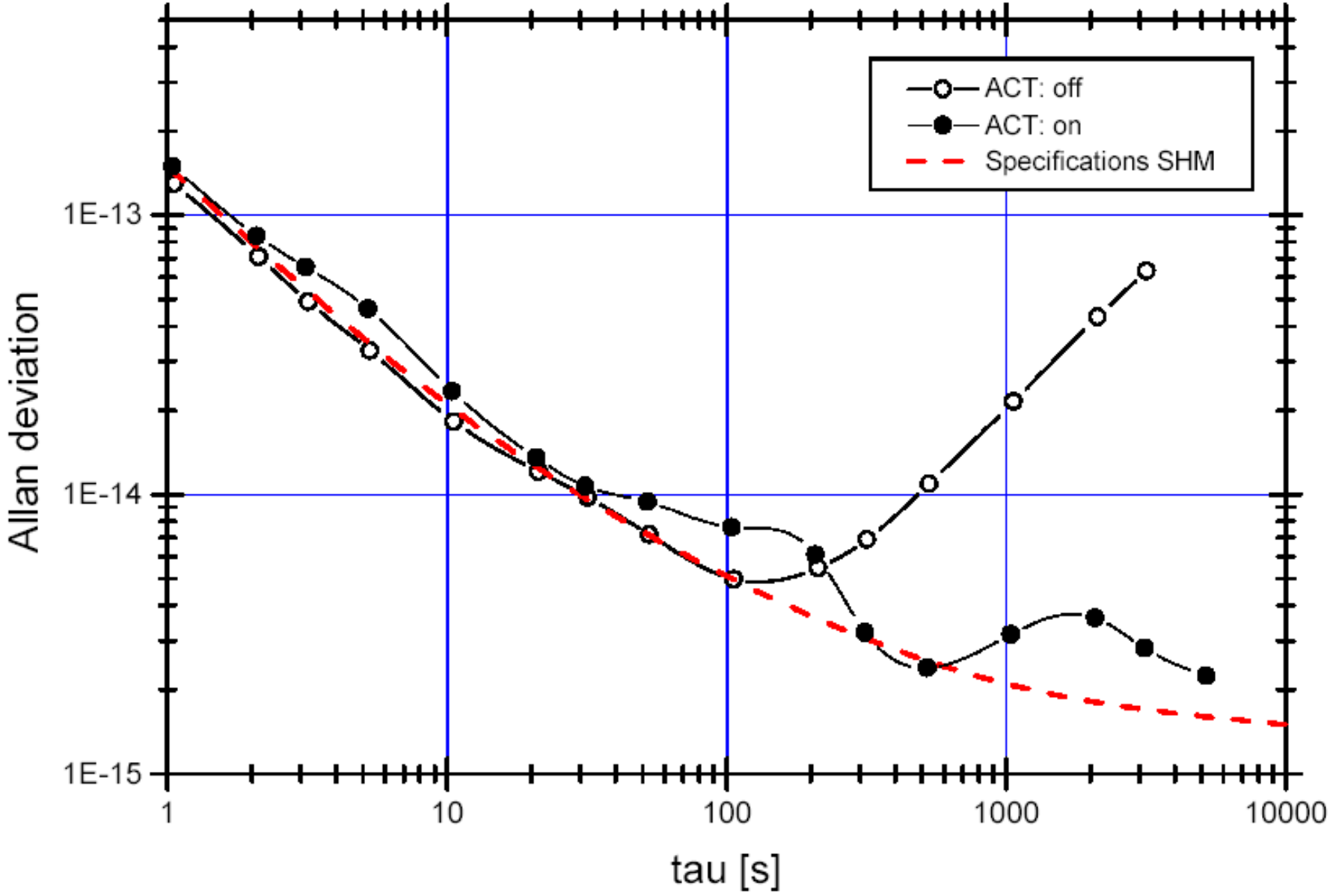

SECONDARY STANDARDS

- OFTEN SEMI-COMMERCIAL PRODUCTS
- ALSO FOR NON-FUNDAMENTAL UNITS AND QUANTITIES (VOLTAGE, RESISTANCE, RF POWER)
- NATIONAL AND INSTITUTIONAL, ALSO TRANSFER STANDARDS FOR TRACEABILITY
- CAN BE USED FOR THE MOST DEMANDING R&D WORK (BUT THEIR APPOINTED CARE-KEEPERS DON’T LIKE IT)
- OFTEN AT THE EDGE OF CURRENT (AT THE TIME OF MANUFACTURE) TECHNOLOGY – NOT KNOWING EXACTLY ON WHICH SIDE OF IT

COMMERCIAL TIME AND FREQUENCY STANDARD

HP 5071A

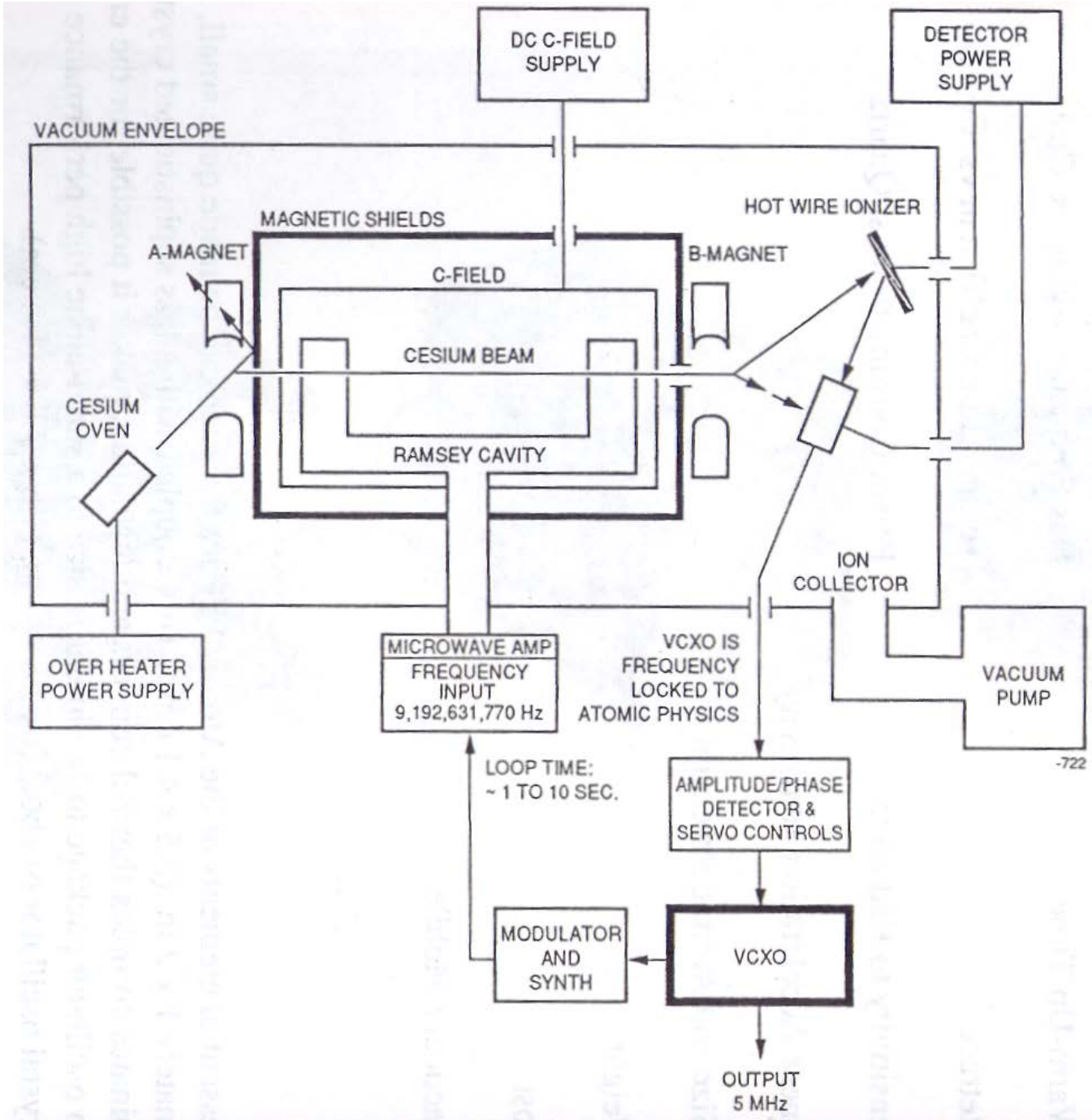
DC C-FIELD SUPPLY
DETECTOR POWER SUPPLY
VACUUM ENVELOPE
MAGNETIC SHIELDS
HOT WIRE IONIZER
A-MAGNET
B-MAGNET
C-FIELD
CESIUM BEAM
CESIUM OVEN
RAMSEY CAVITY
ION COLLECTOR
OVER HEATER POWER SUPPLY
MICROWAVE AMP
FREQUENCY INPUT
9,192,631,770 Hz
VCXO IS FREQUENCY LOCKED TO ATOMIC PHYSICS
VACUUM PUMP
-722
LOOP TIME:
~ 1 TO 10 SEC.
AMPLITUDE/PHASE DETECTOR & SERVO CONTROLS
MODULATOR AND SYNTH
VCXO
OUTPUT
5 MHz

THE OPERATING PRINCIPLE OF CLASSICAL CS

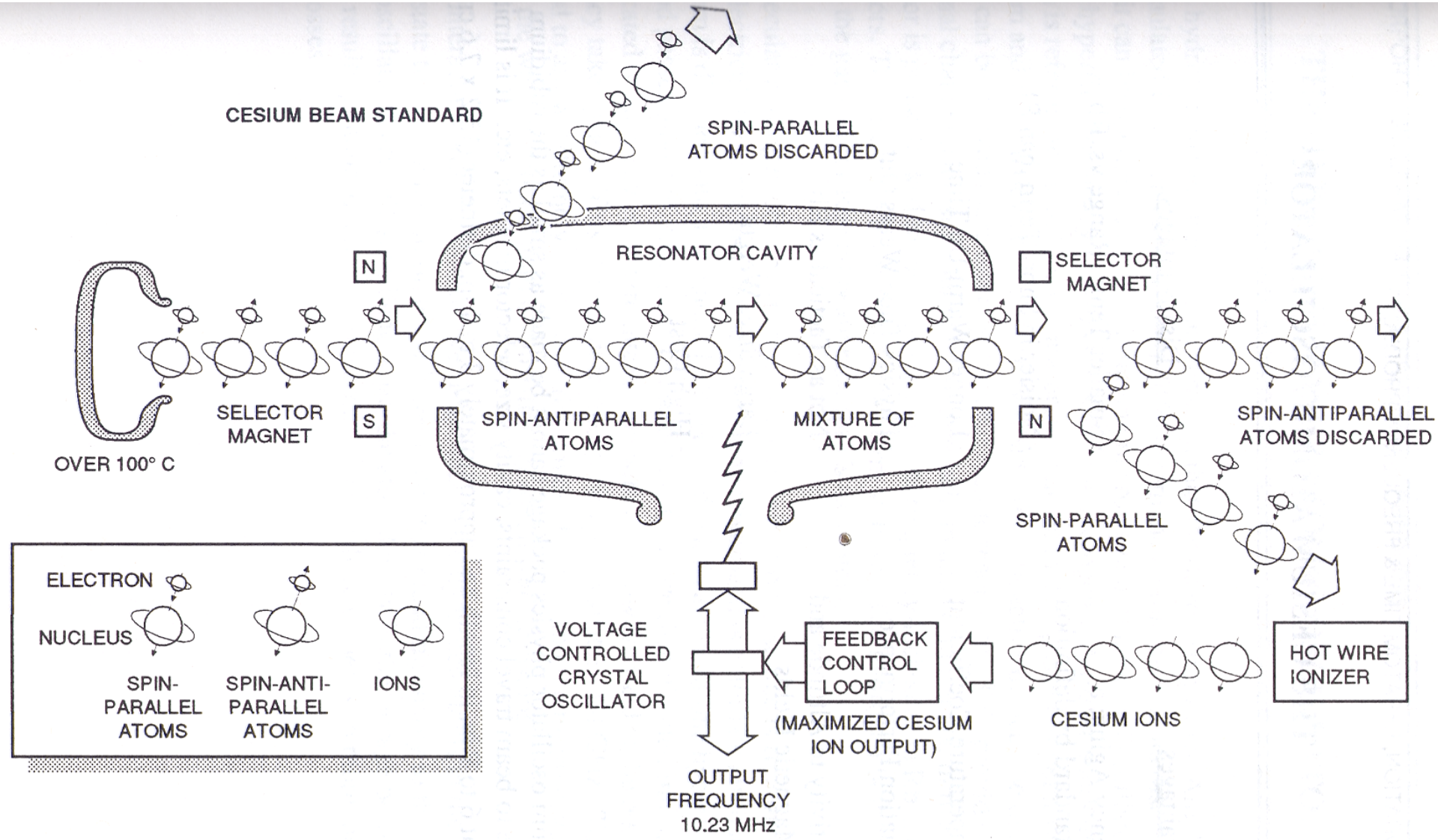

SPECIFICATIONS

Accuracy and Stability
Full Environmental Range
Conditions (any combination of):
Temperature: 0° to 50° C
Humidity: 0 to 80% (40° C maximum)
DC Magnetic Field: 0 to 2 gauss
Warmup Time (typical):
15 minutes to normal operating status
30 minutes to full specs
Settability
Resolution: 6.3×10^{-15}
Range: $\pm 1.0 \times 10^{-9}$
Frequency Change Due to Environment: $\pm 1 \times 10^{-13}$ ($\pm 8 \times 10^{-14}$ Option 001)
Accuracy: $\pm 1 \times 10^{-12}$ $\pm 5 \times 10^{-13}$ (Option 001)

Time domain stability[1], 5/10-MHz outputs:

Averaging Times	HP 5071A	HP 5071A Option 001
10^4 s	$\leq 2.7 \times 10^{-13}$	$\leq 8.5 \times 10^{-14}$
10^5 s	$\leq 8.5 \times 10^{-14}$	$\leq 2.7 \times 10^{-14}$
5 days	$\leq 5.0 \times 10^{-14}$	$\leq 1.0 \times 10^{-14}$
30 days	$\leq 5.0 \times 10^{-14}$	$\leq 1.0 \times 10^{-14}$
30 days (typical)	$\leq 1.5 \times 10^{-14}$	$\leq 5.0 \times 10^{-15}$

[1]Based on long-term measurement at NIST.

Flicker Floor:
$\leq 5.0 \times 10^{-14}$ ($\leq 1.5 \times 10^{-14}$ typical)
$\leq 1.0 \times 10^{-14}$ (Option 001 $\leq 5.0 \times 10^{-15}$ typical)
Reproducibility: $\leq 5.0 \times 10^{-13}$

MORE SPECIFICATIONS

Frequency Domain Stability

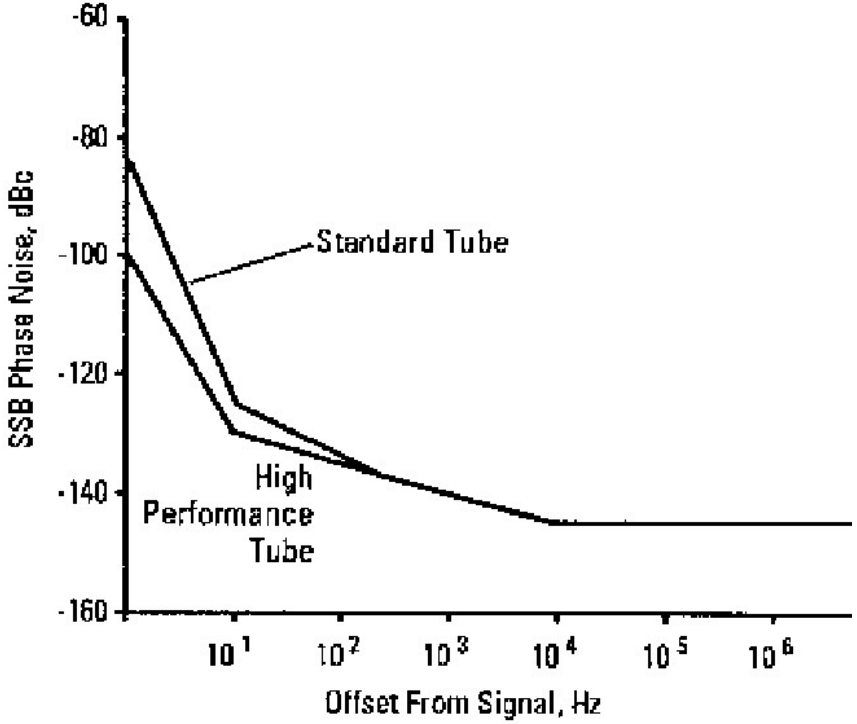

Time Domain Stability (Allan Deviation)

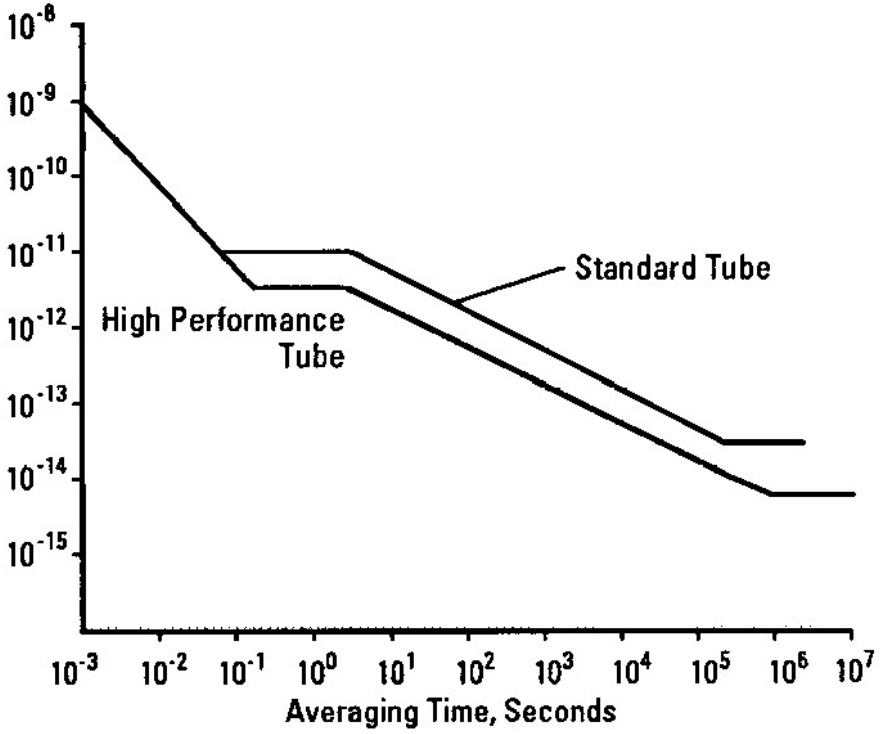

A SIMPLE SECONDARY STANDARD SYSTEM FOR TIME AND FREQUENCY

2 CS, 1 RB, 1 DOCXO, 2 GPS, 1 DCF, 2 TI COUNTERS, 2 UPS

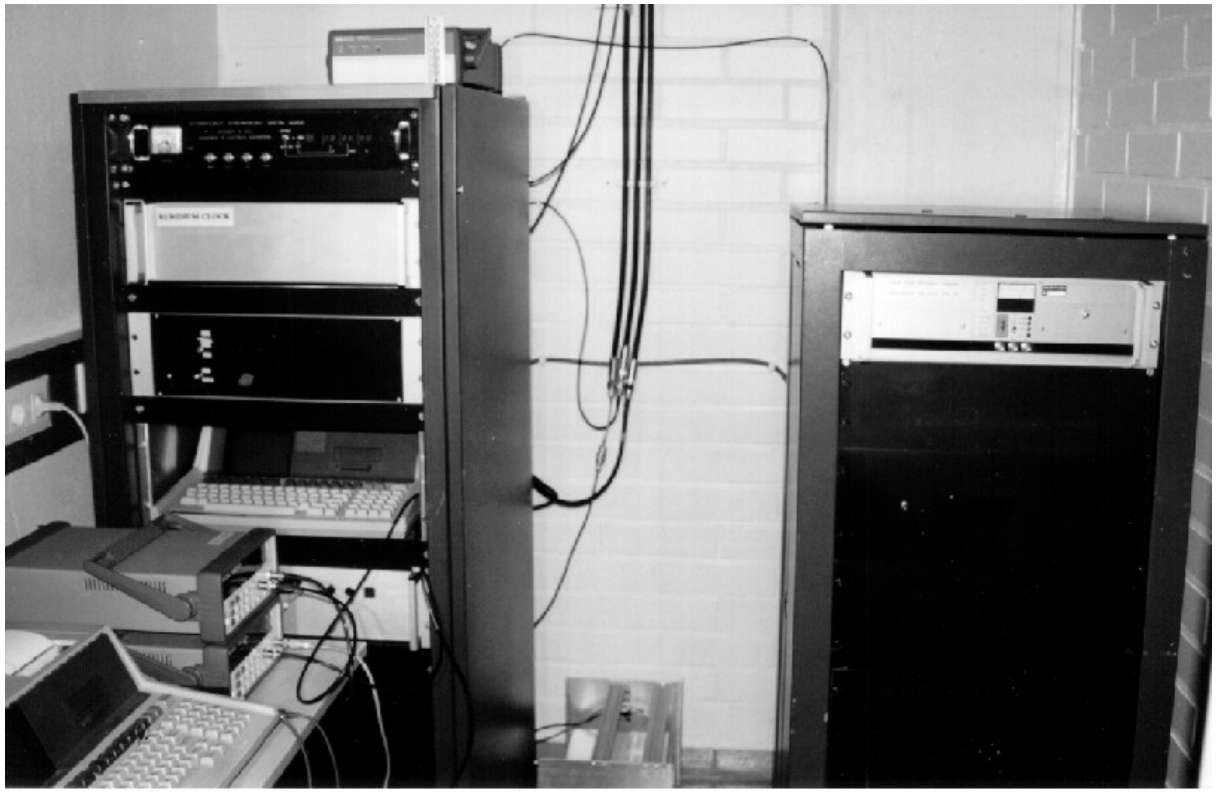

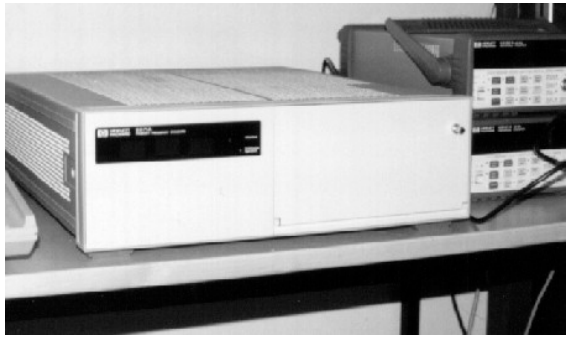

A SINGLE REFERENCE DOES NOT MAKE METROLOGY REGARLESS OF ITS QUALITY

WORKING STANDARDS

- HIGH-QUALITY COMMERCIAL INSTRUMENTS (DVM, COUNTER, NETWORK ANALYZER WITH CAL KIT)
- INSTITUTIONAL, ALSO TRANSFER STANDARDS FOR TRACEABILITY
- HOME-BUILT SPECIAL DEVICES FOR COMPLICATED PARAMETER COMBINATIONS
- USED IN EVERYDAY R&D WORK
- PERFORMANCE DEPENDS ON USER QUALIFICATIONS
- SUSCEPTIBLE TO SUDDEN ENVIRONMENTAL EFFECTS

A BIT BIASED VIEW ?

Oscillator Continuum

	Cesium	Rubidium	Quartz	Quartz w/GPS
Long-Term Accuracy	$\pm 7 \times 10^{-12}$ for life of cs. beam tube	$\pm 3 \times 10^{-11}$/mo.	$\pm 5 \times 10^{-10}$/day	$<1 \times 10^{-12}$/day avg. when locked to GPS
Long-Term Aging	N/A	1×10^{-12}/day	1×10^{-10}/day	N/A
Oscillator Reliability (MTBF)*	120,000–150,000 hrs.	50,000–150,000 hrs.	>500,000 hrs.	>500,000 hrs.

THIS MANUFACTURER DOES NOT HAVE RUBIDIUMS ANY MORE...

A WORKING STANDARD FOR FIELD USE

1 RB, 1 GPS, 1 TI COUNTER, 1 UPS

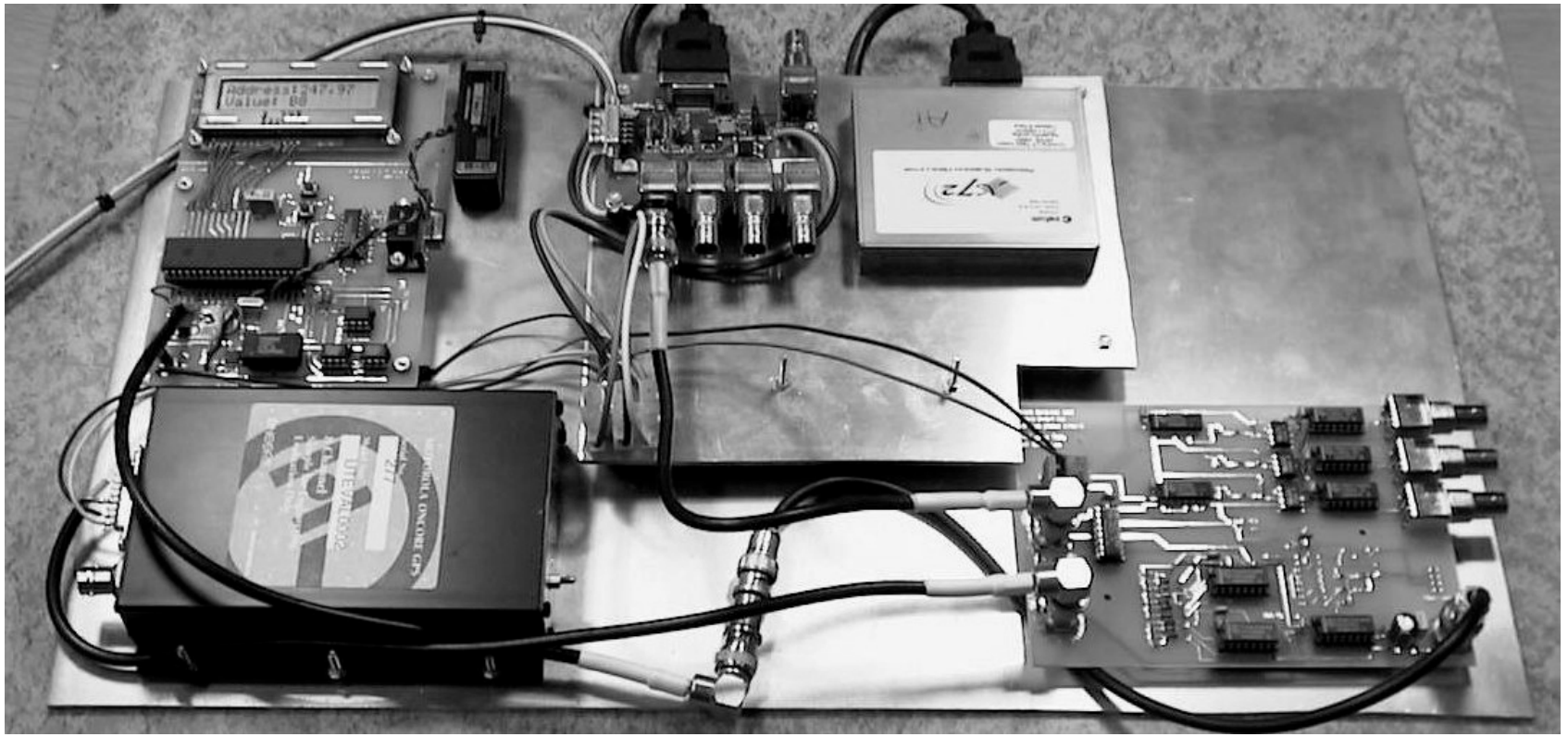

CLASSIFICATION BY PARAMETER TO BE MEASURED

- AVAILABLE TECHOLOGY GENERALLY FAVOURS THIS APPROACH
- MAY CAUSE LIMITATION OF FIELD
  - MEASURING VOLTAGE MAY NOT BE THE BEST SOLUTION FOR A SPECIFIC SENSOR

CLASSIFICATION BY TYPE OF INSTRUMENT

- USEFUL FOR ADVANCED MULTI-FUNCTION DEVICES
  - TEST RECEIVERS, SIGNAL ANALYZERS, SOME MULTIMETERS
- OFTEN GIVES LESS THAN BEST-OF-INDUSTRY PERFORMANCE FOR ALL MEASURED QUANTITIES
  - SPECTRUM ANALYZER CAN MEASURE FREQUENCY BUT ITS OWN OSCILLATORS TEND TO BE RATHER UNSTABLE
- MAY MASK THE PRINCIPAL PHENOMENON
- CAN REDUCE INSTRUMENT SALES

LECTURE THREE

VOLTAGE AND CURRENT

- DC
- AUDIO FREQUENCIES
- AS A FUNCTION OF TIME

A NASTY DISCREPANCY

- CURRENT IS INDEED THE **SI** SYSTEM'S BASIC QUANTITY BUT PRACTICAL INSTRUMENTS HAVE FAR SUPERIOR PERFORMANCE WHEN MEASURING VOLTAGES

MEASURING VOLTAGES ACCURATELY

- LOWER THE METER INPUT RESISTANCE IF THE D.U.T. CAN WITHSTAND THAT
- CONSIDER AVERAGING AND STATISTICAL FEATURES OF THE DVM
- FOR AC VOLTS – CHECK THE UPPER USABLE FREQUENCY OF THE METER
- USE ONLY ELECTRICALLY AND MAGNETICALLY SHIELDED CABLING
- LOOK FOR GROUND LOOPS
- GO TO BATTERY POWER IF MAINS HUM IS THE PROBLEM
- EVALUATE THERMAL AND GALVANIC POTENTIAL DIFFERENCES POSSIBLY SUMMING UP TO THE MEASURED VOLTAGE

USING COAX AND FEED THROUGHS

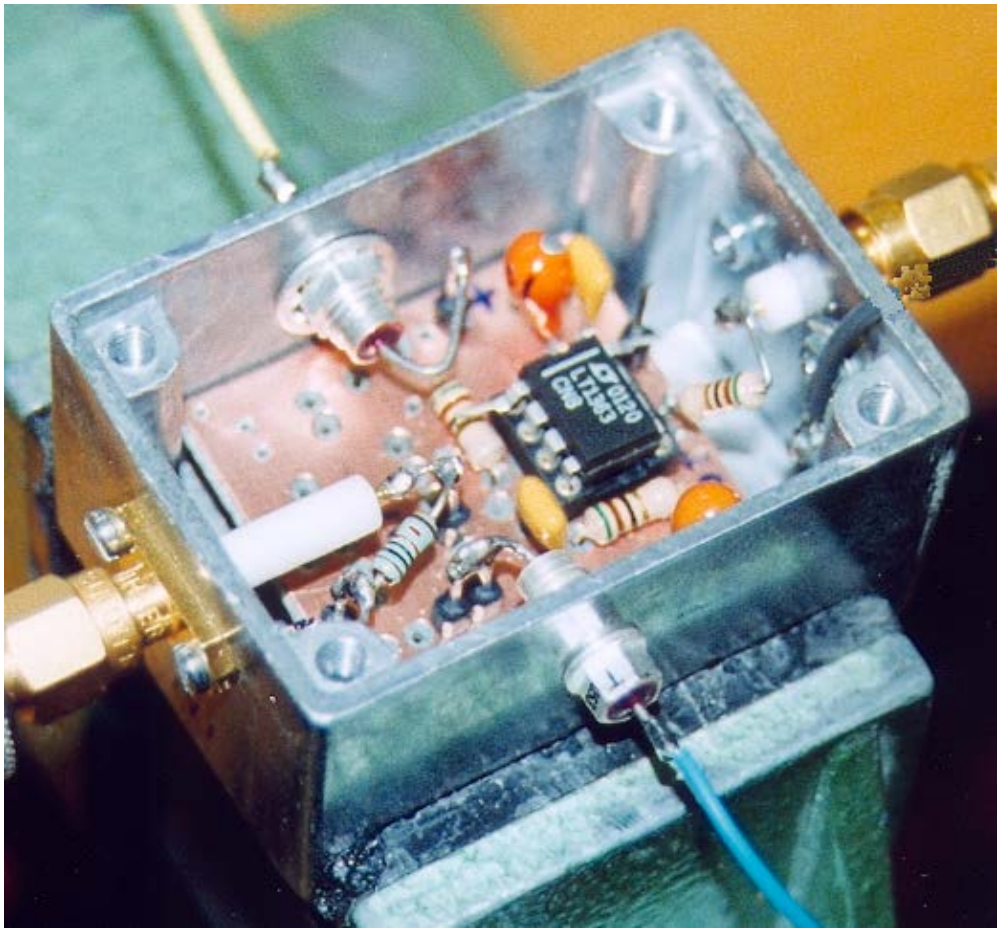

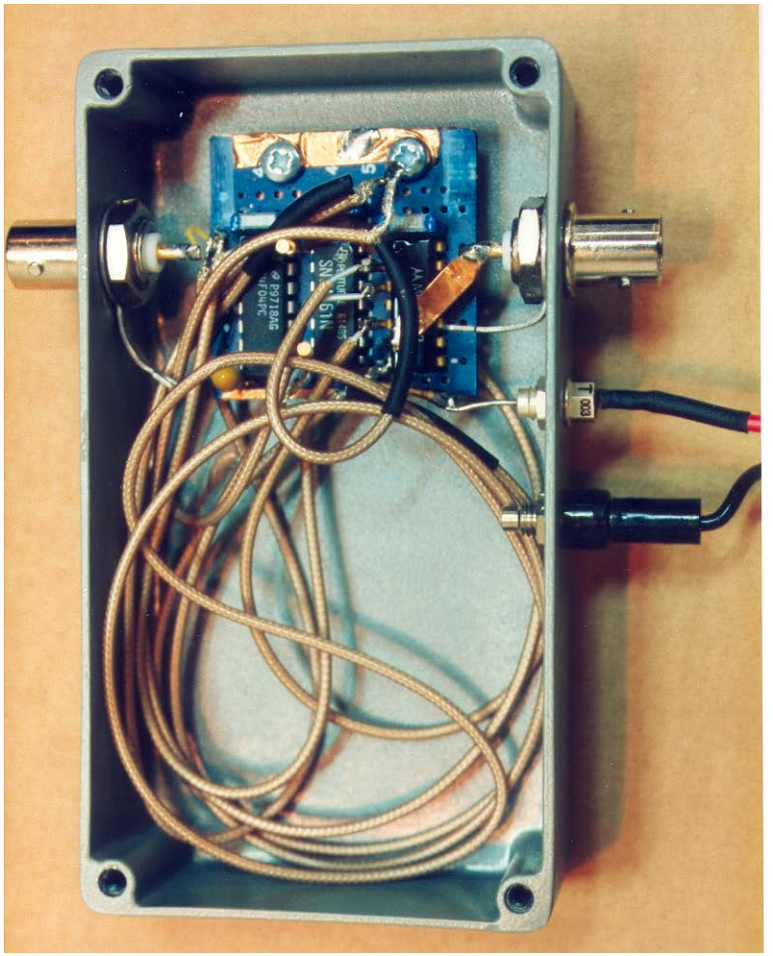

THE BEST WAY TO REDUCE THE LEVEL OF INTERFERENCE PENETRATION INTO METALLIC ENCLOSURE

COMMON MODE VOLTAGES

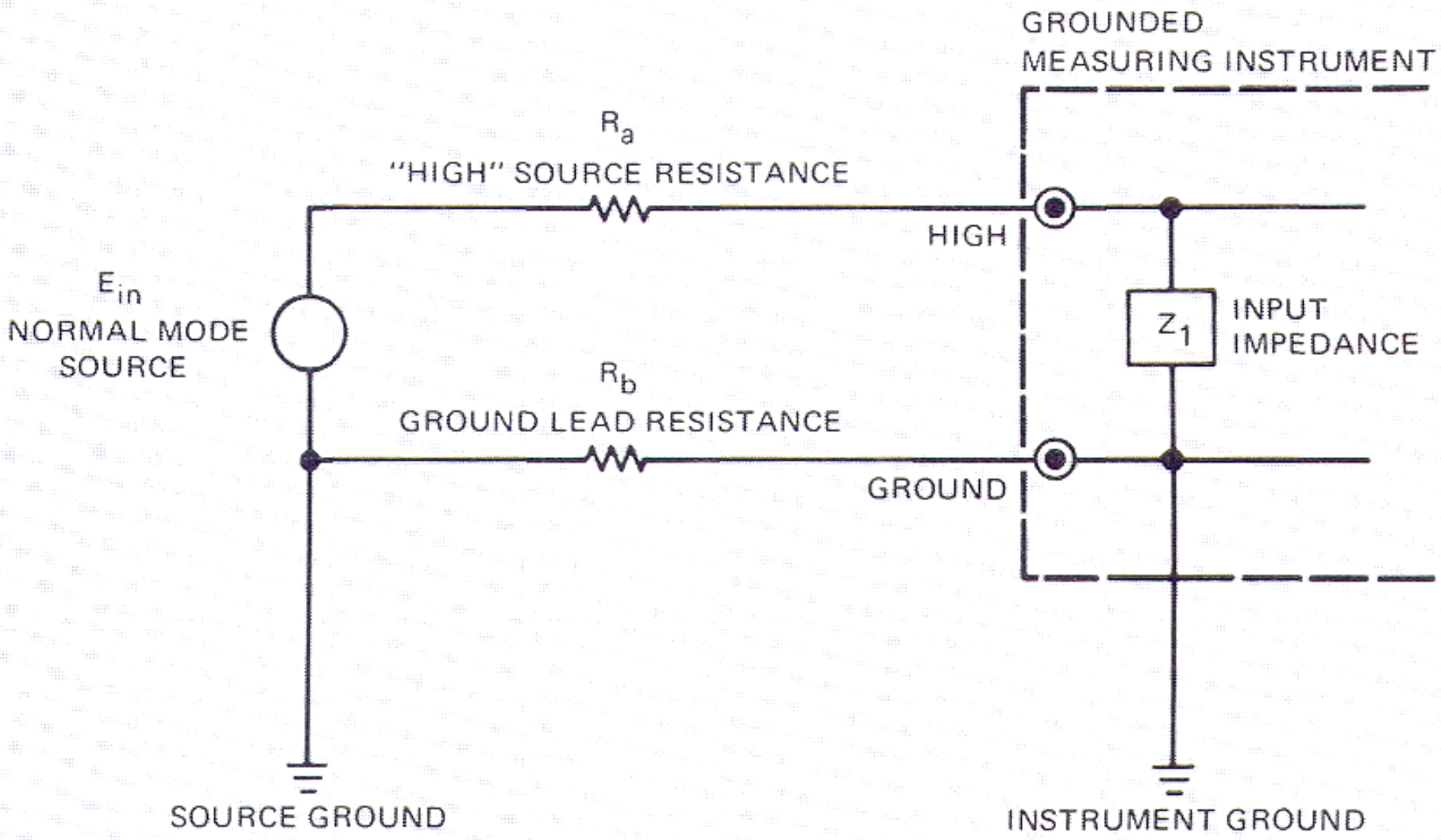

CURRENTS CAUSING FALSE READINGS

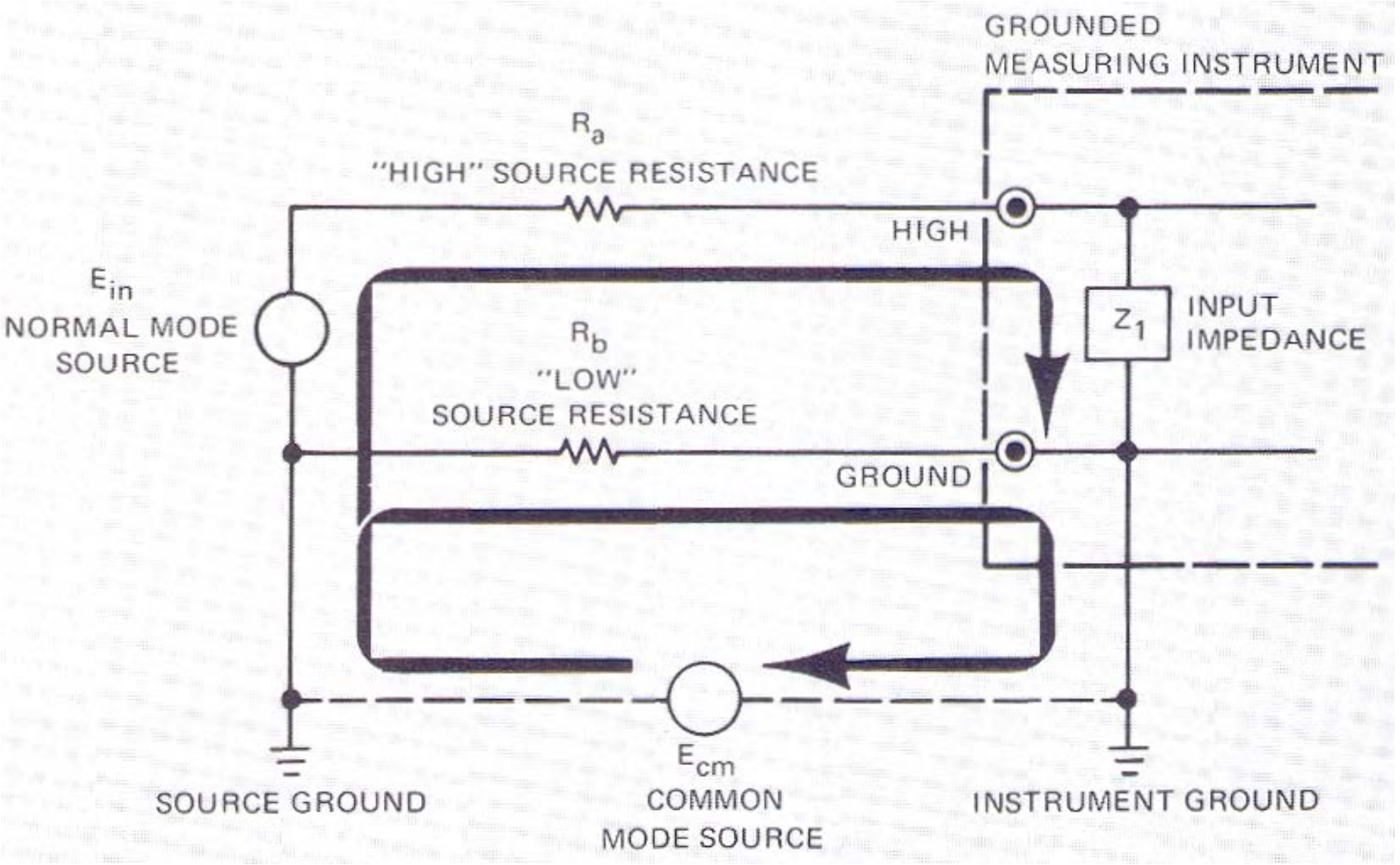

USING THE GUARD

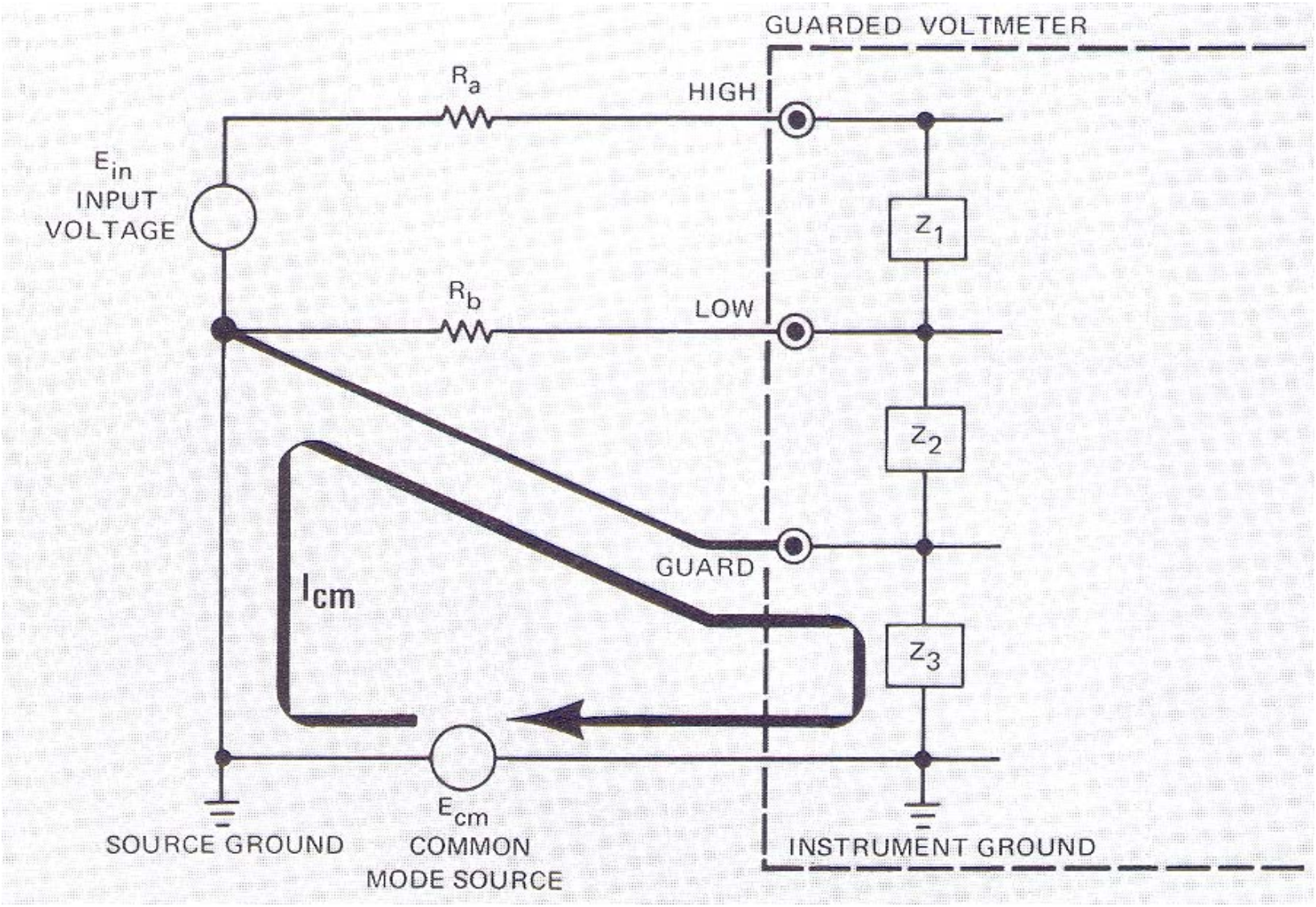

BATTERY SUPPLY FOR REMOTE ON-SITE VOLTAGE RECORDING

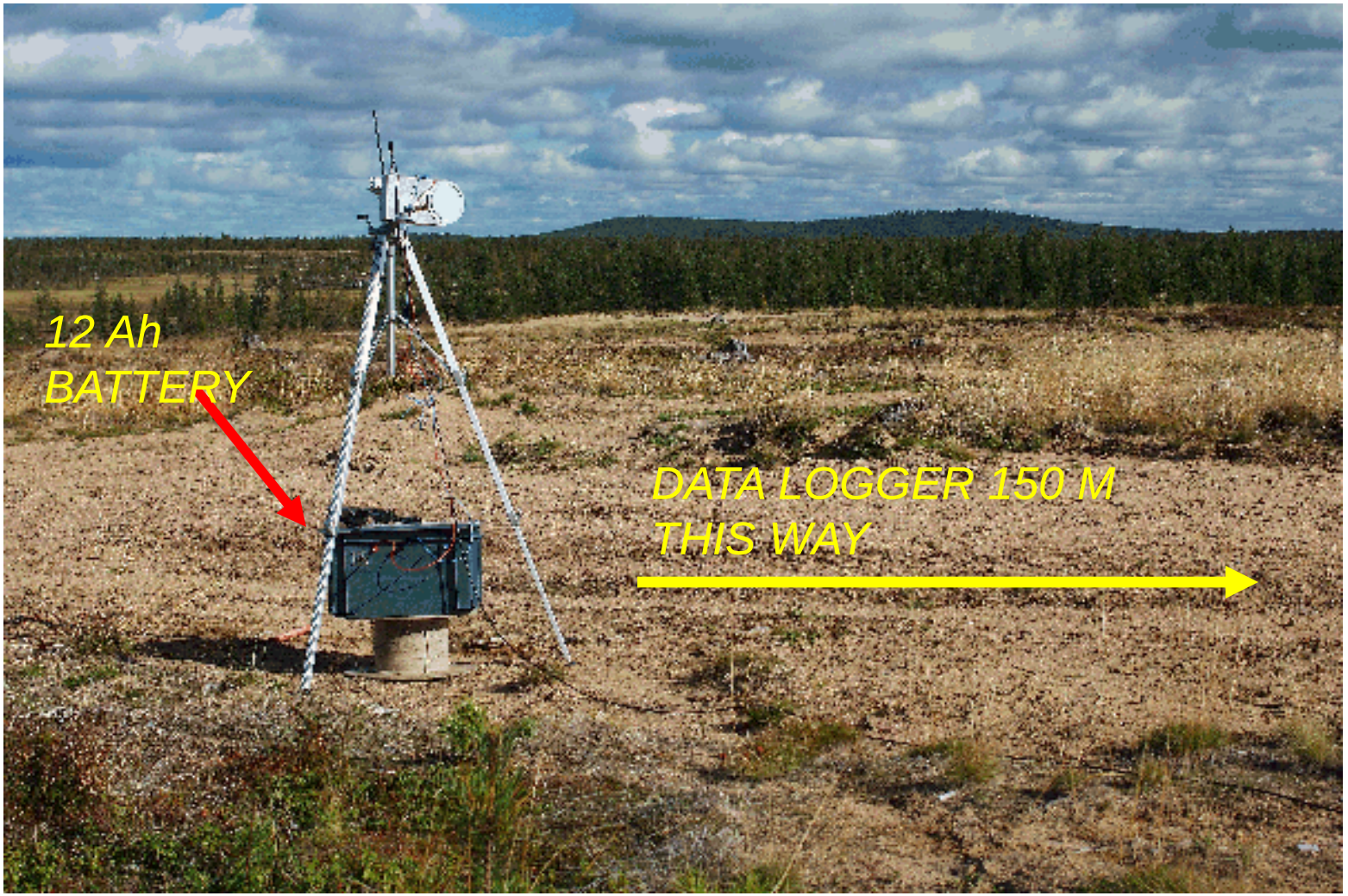

A QUESTIONABLE SUGGESTION BY TEKTRONIX

Where to Clip the Ground Clip

Measuring a signal requires two connections: the probe tip connection and a ground connection. Probes come with an alligator-clip attachment for grounding the probe to the circuit under test. In practice, you clip the grounding clip to a known ground in the circuit, such as the metal chassis of a stereo you are repairing, and touch the probe tip to a test point in the circuit.

COMMERCIAL DVM

HP 3458A

SPECIFICATIONS

DC Voltage

Range	Full scale	Maximum resolution	1-Year* accuracy	Transfer accuracy 10 min., tref ±0.5° C	Input impedance
			ppm of reading + ppm of range		
100 mV	120.00000	10 nV	9(5) + 3	0.5 + 0.5	>10 GΩ
1 V	1.20000000	10 nV	8(4) + 0.3	0.3 + 0.1	>10 GΩ
10 V	12.0000000	100 nV	8(4) + 0.05	0.05 + 0.05	>10 GΩ
100 V	120.000000	1 µV	10(6) + 0.3	0.5 + 0.1	10 MΩ ±1%
1000 V	1050.00000	10 µV	10(6) + 0.1	1.5 + 0.05	10 MΩ ±1%

One-year specifications for NPLC 100 within 24 hours and ±1 C of last ACAL, Tcal ±5 C, MATH NULL, fixed range. Add 2 ppm of reading additional error for HP factory traceability of 10 V dc to US NIST. Traceability error is the absolute error relative to National Standards associated with the source of last external calibration. Transfer specifications for NPLC 100, following 4-hour warm-up. Full scale to 10% of full scale. Measurements on the 1000 V range are within 5% of the initial measurement value and following measurement settling. Tref is the starting ambient temperature. Measurements are made on a fixed range using accepted metrology practices.
*High stability (Option 002) ppm of reading in parentheses.

Noise Rejection (dB)[1]

	AC NMR[2]	AC ECMR	DC ECMR
NPLC < 1	0	90	140
NPLC ≥ 1	60	150	140
NPLC ≥ 10	60	150	140
NPLC ≥ 100	60	160	140
NPLC = 1000	75	170	140

[1] Applies for 1 kΩ unbalance in the LO lead and ±0.1% of the line frequency currently set for LFREQ.
[2] For line frequency ±1%, ACNMR is 40 dB for NPLC ≥ 1, or 55 dB for NPLC ≥ 100. For line frequency ±5%, ACNMR is 30 dB for NPLC ≥ 100.

MORE SPECIFICATIONS

True rms AC Voltage
(Synchronous Subsampled Mode)

Range	Full scale	Maximum resolution	Accuracy* 24 hour–2 year 40 Hz to 1 kHz % of reading + % of range	Input impedance
10 mV	12.00000	10 nV	0.02 + 0.011	1 MΩ ±15% with <140 pf
100 mV	120.00000	10 nV	0.007 + 0.002	1 MΩ ±15% with <140 pf
1 V	1.2000000	100 nV	0.007 + 0.002	1 MΩ ±15% with <140 pf
10 V	12.000000	1 µV	0.007 + 0.002	1 MΩ ±2% with <140 pf
100 V	120.00000	10 µV	0.02 + 0.002	1 MΩ ±2% with <140 pf
1000 V	700.0000	100 µV	0.04 + 0.002	1 MΩ ±2% with <140 pf

*Specifications apply for full scale to 10% of full scale, dc <10% of ac, sine-wave input, crest factor of 1.4. Within 24 hours and ± 1° C of last ACAL. Peak (ac+dc) input limited to 5 x full scale for all ranges. Add 2 ppm of reading additional error for HP factory traceability of 10 Vdc to US NIST.

STILL MORE

Resistance

Range	Full scale	Maximum resolution	Current through unknown	1-Year Accuracy* (4-wire Ω) ppm of rdg+ppm of range
10 Ω	12.00000	10 μΩ	10 mA	15 + 5
100 Ω	120.00000	10 μΩ	1 mA	12 + 5
1 kΩ	1.2000000	100 μΩ	1 mA	10 + 0.5
10 kΩ	12.000000	1 mΩ	100 μA	10 + 0.5
100 kΩ	120.00000	10 m Ω	50 μA	10 + 0.5
1 MΩ	1.2000000	100 m Ω	5 μA	15 + 2
10 MΩ	12.000000	1 Ω	500 nA	50 + 10
100 MΩ	120.00000	10 Ω	500 nA	500 + 10
1 GΩ	1.2000000	100 Ω	500 nA	0.5% + 10

*Specifications for 100 NPLC, offset compensation on, within 24 hours and ± 1° C of last ACAL, Tcal ±5° C. Add 3 ppm of reading additional error for HP factory traceability of 10 kΩ to US NIST.

Memory

	Standard Readings	Bytes	Option 001 Readings	Bytes
Reading storage (16 bit)	10,240	20 k	+65,536	+128 k
Non-volatile, for subprograms and/or state storage	—	14 k	—	—

DOPPLER SIMULATOR UNDER TEST

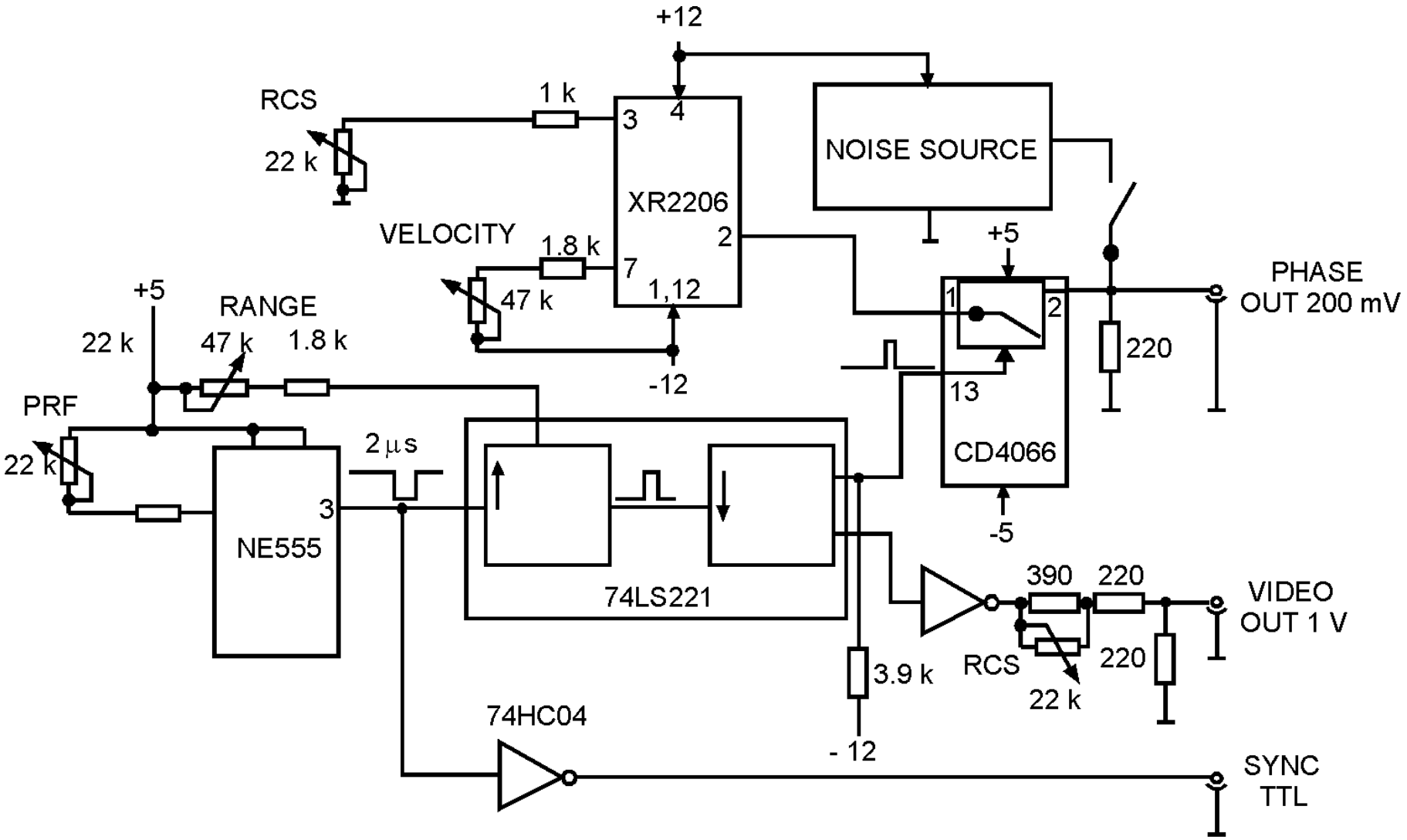

SCOPE'S TRUE SAMPLING PERFORMANCE IN THIS TASK

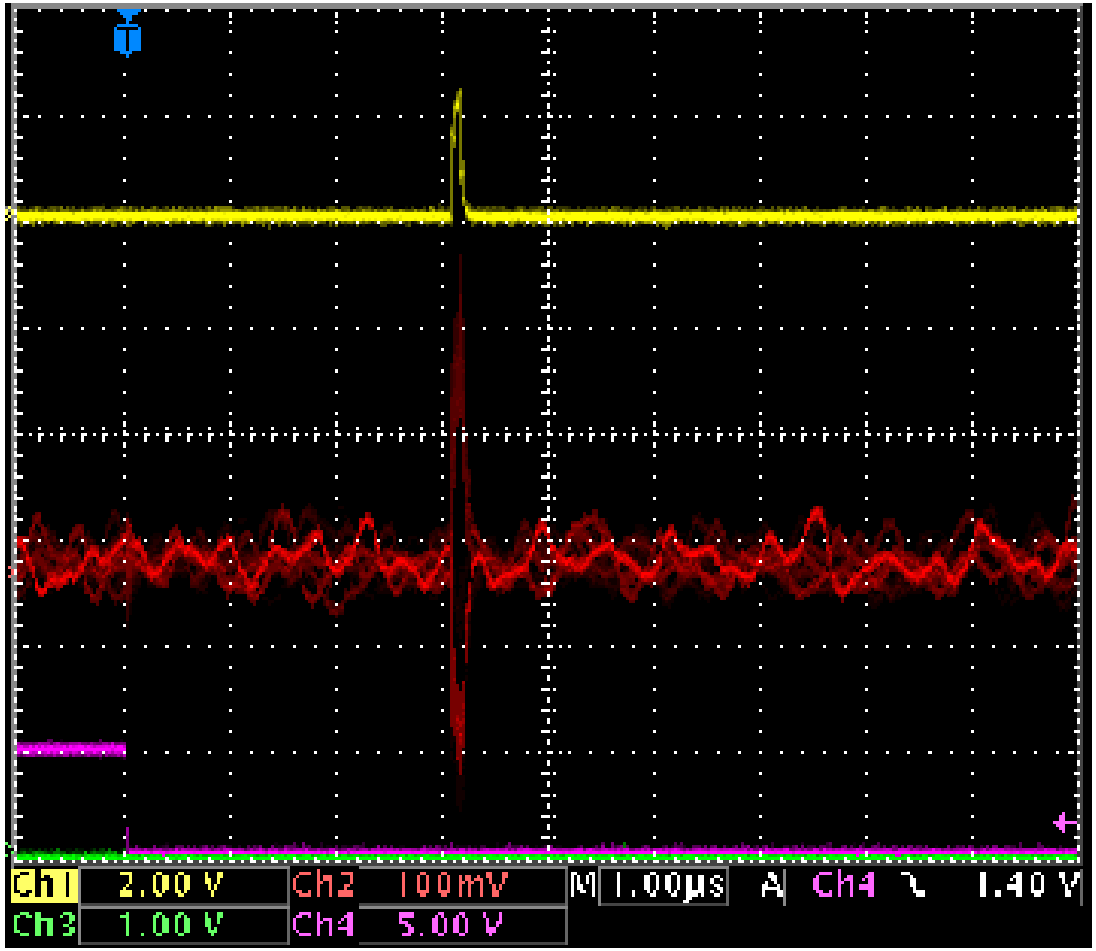

BECAUSE THE WAVEFORM UPDATE RATE IS JUST 145 1/s

MANUFACTURER'S STORY...

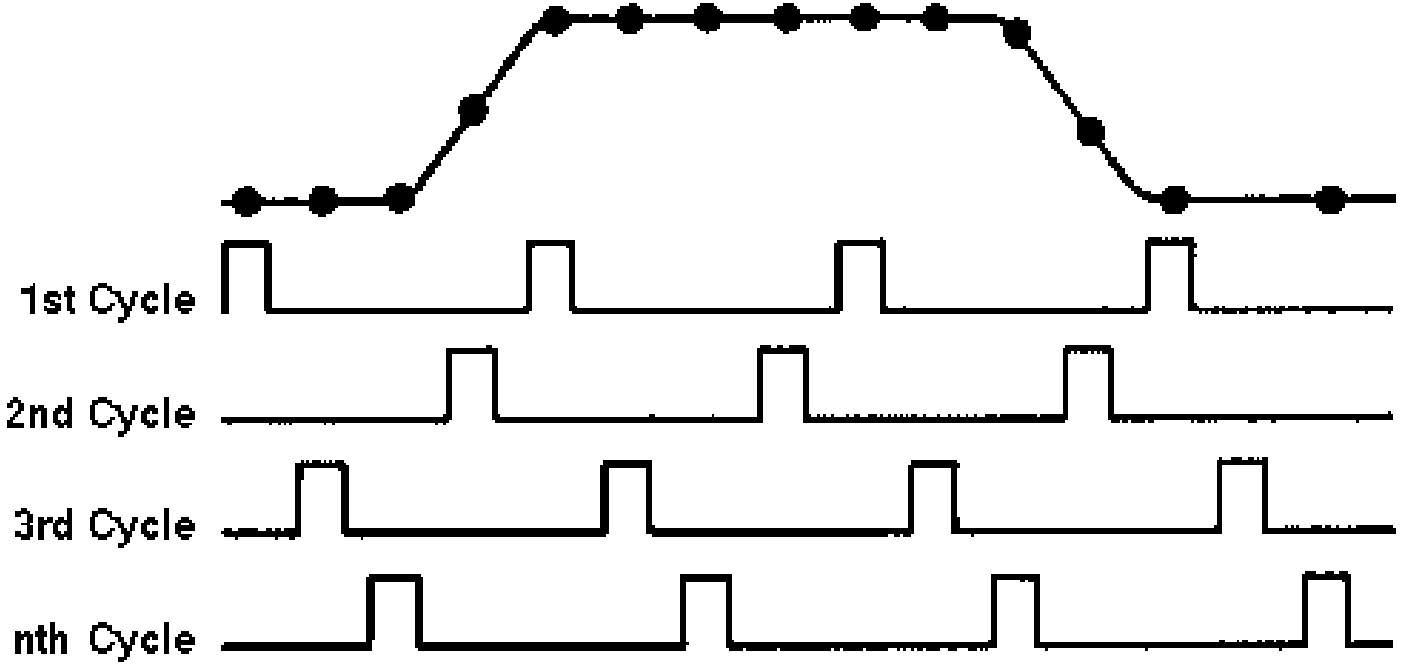

Equivalent-time sampling can acquire any signal up to the analog bandwidth of the scope. The scope gathers the necessary number of samples across several triggers with a lower-cost digitizer. Each acquisition starts at a different time with respect to the trigger. Equivalent-time cannot create a meaningful display from a single-shot event. The signal must repeat identically each time or the displayed waveform will be distorted.

TRICKS YOU SHOULD BE AWARE OF...

Waveform interpolators approximate with a (FIR) digital filter. The useful storage bandwidth is sampling rate divided by 2.5. The interpolator filter is also quite powerful for pulse-type waveforms as long as the rise time of the pulse is greater than 1.7 times the sampling period. Pulses with faster edges, however, contain frequency components near the step transition that exceed the Nyquist criterion. These high-frequency components cause aliasing and can never be accurately recovered. Many scopes provide an adaptive pre-filter that locates fast transitions and significantly reduces their high-frequency content.

SO, WHAT IF YOU DON'T EXACTLY KNOW YOUR WAVEFORM BEFORE YOU FIRST MEASURE IT ? IF IT DOES NOT FILL THE ABOVE ASSUMPTIONS ? WHO'S GOING TO TELL IT TO YOU ?

SATURATION IN THE PRE-AMPLIFIER

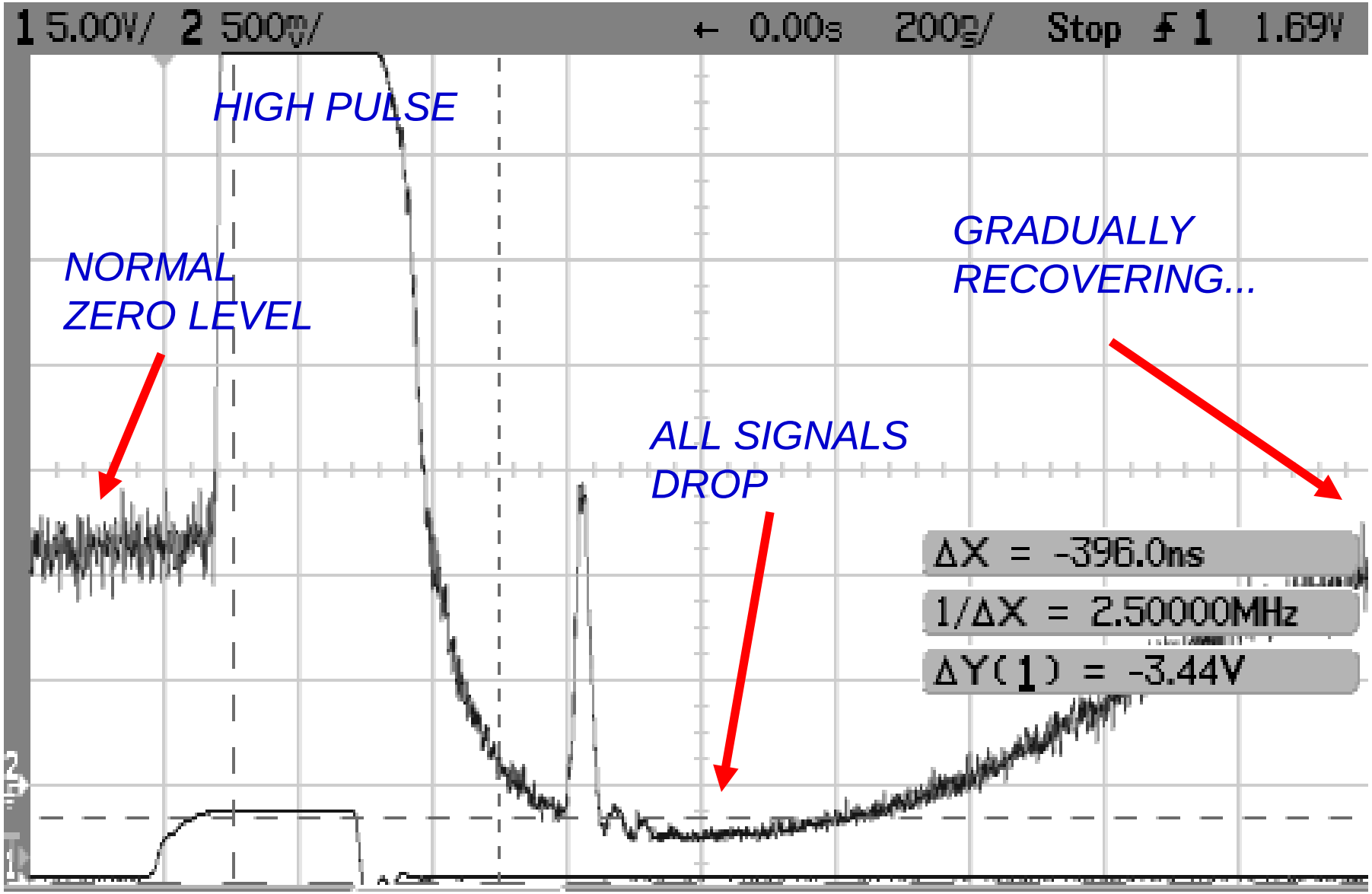

USING SCOPE PERSISTENCE

DEPENDING ON SCOPE TECHNOLOGY YOU MAY BE ABLE TO DETECT THE RANGE OF VARIATIONS EASIER EVEN THOUGH THE INITIAL UPDATE RATE IS LESS FAVOURABLE

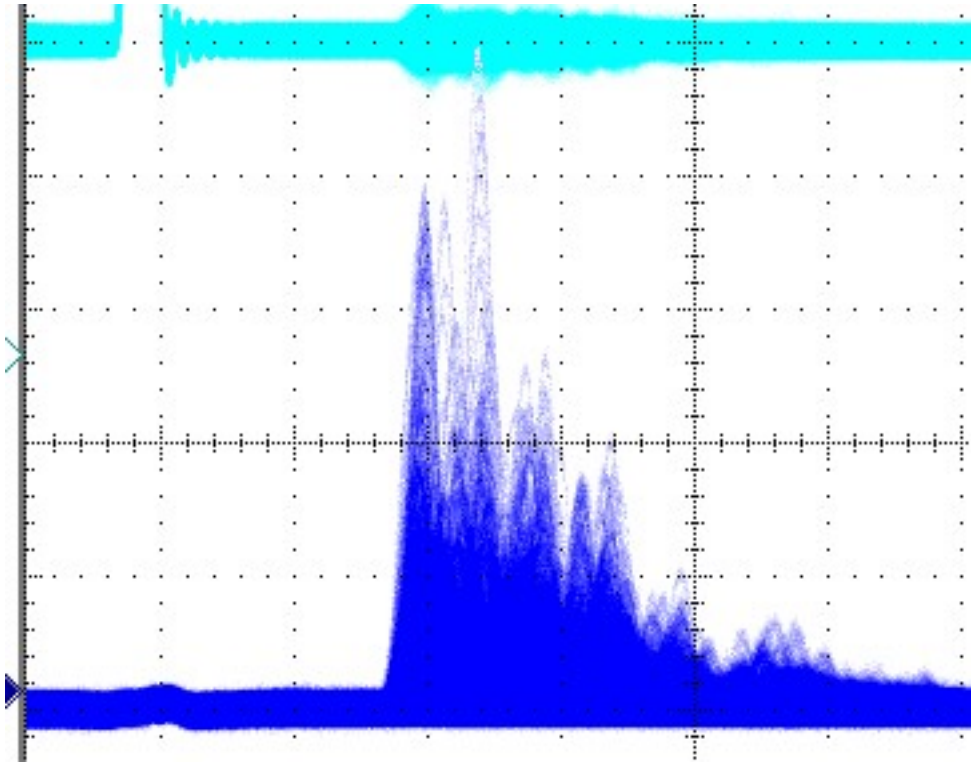

PROBE COMPENSATION

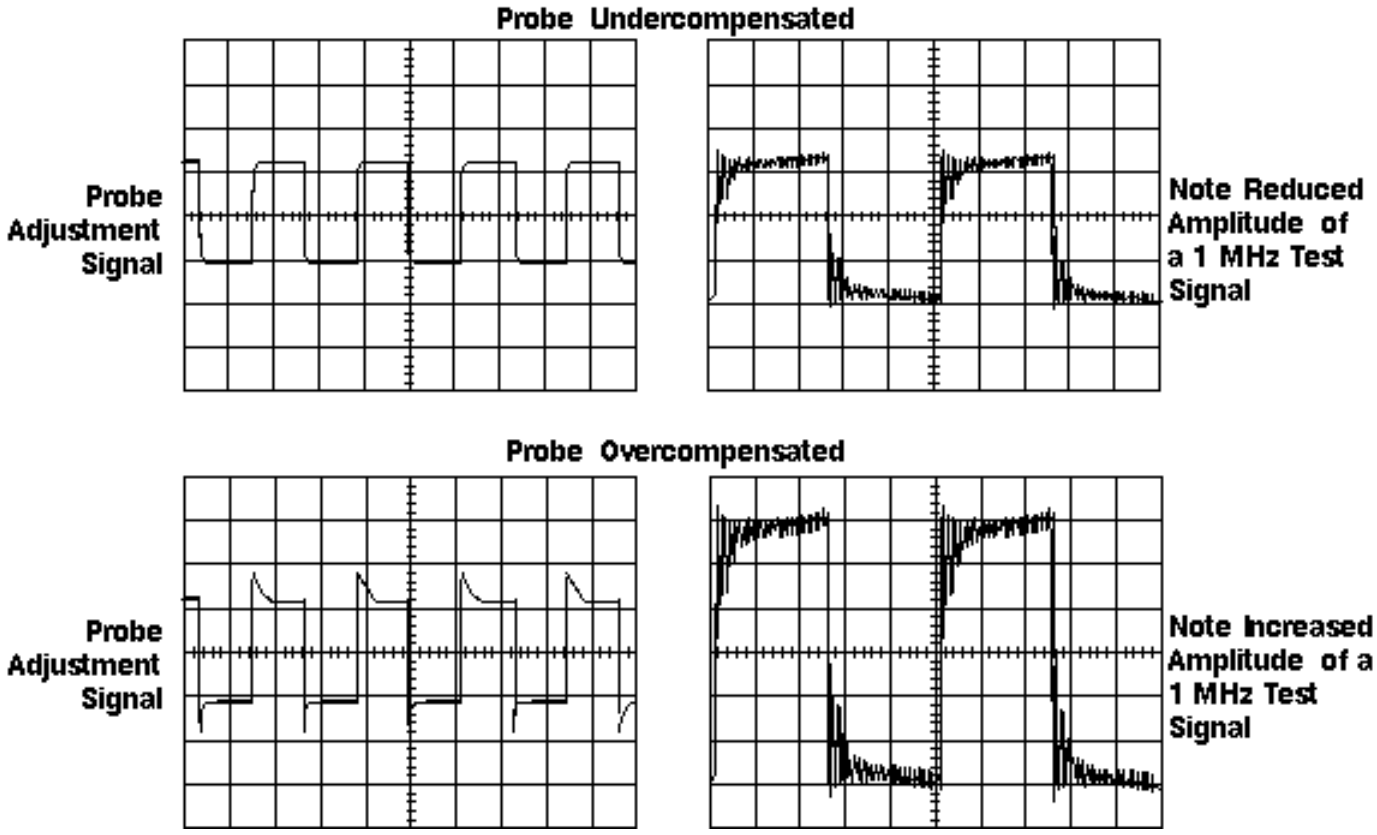

DIFFERENTIAL MEASUREMENTS

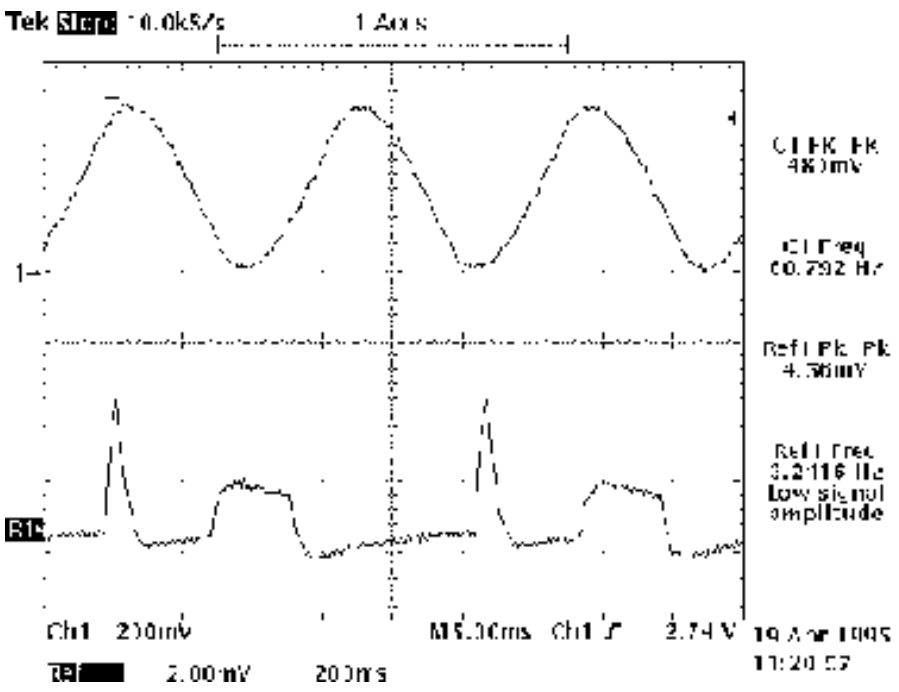

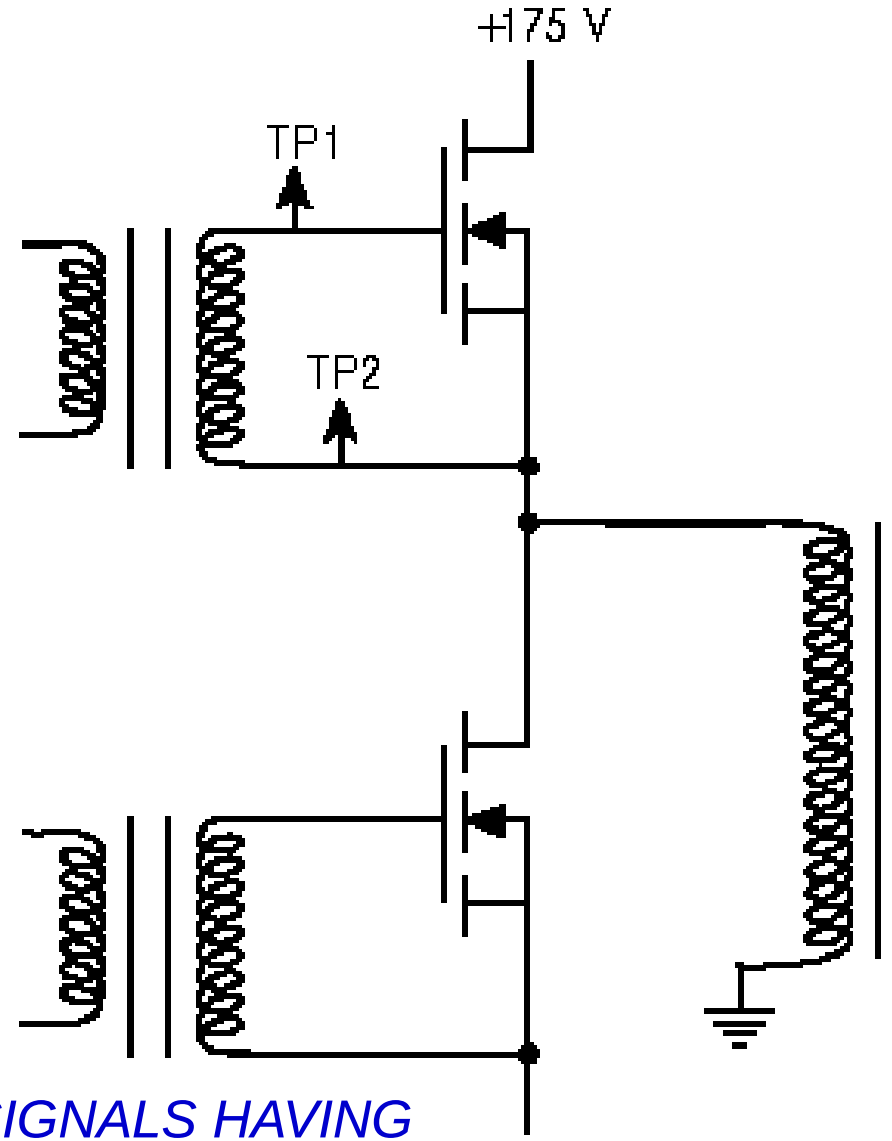

TO FIND THE WAVEFORM OF SIGNALS HAVING A SUBSTANTIAL POTENTIAL DIFFERENCE TO GROUND

GROUND LOOPS REVISITED

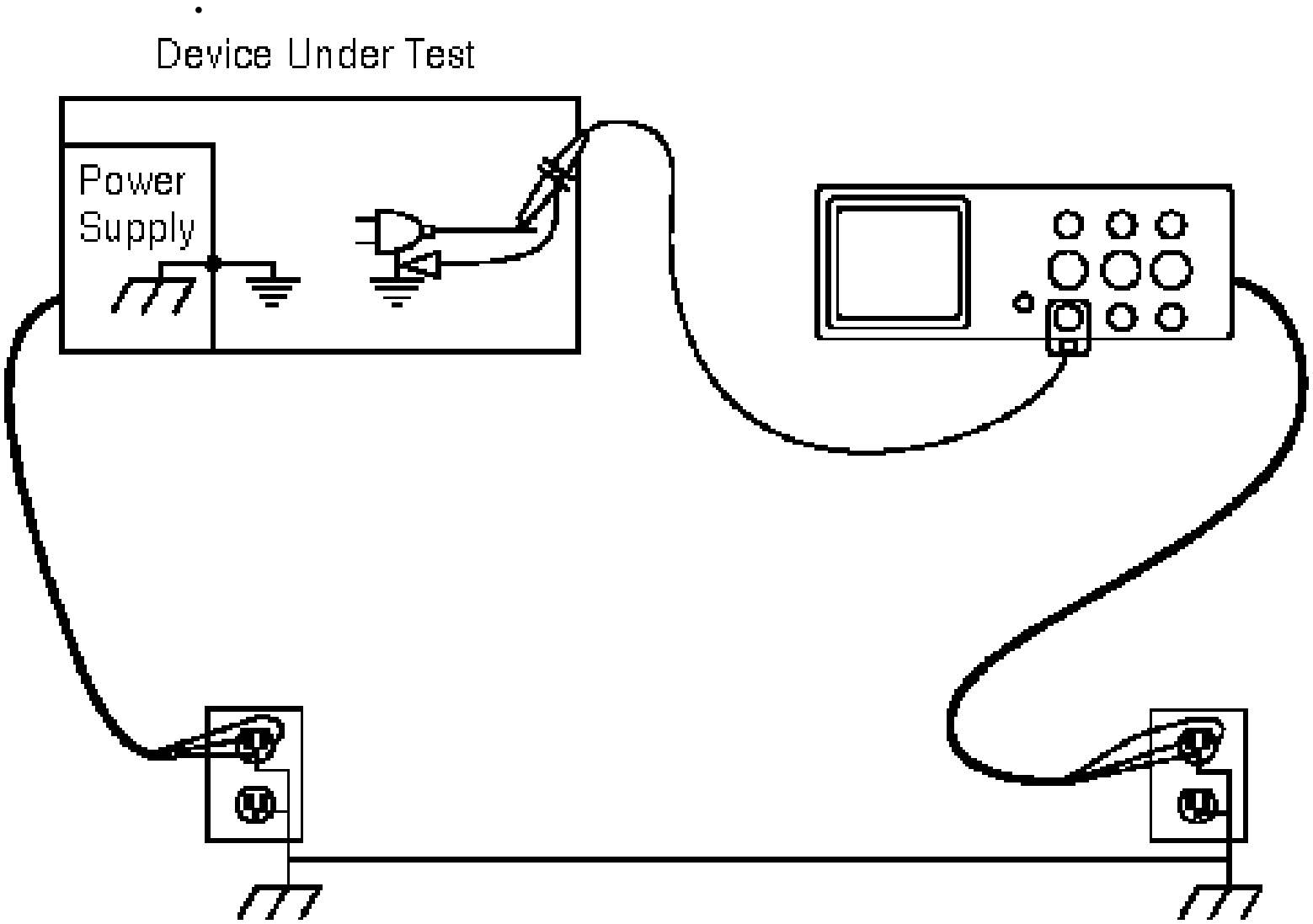

FALSE REMEDY

In these situations, it's often tempting to remove the probe ground lead. At high frequencies, the probe begins to add "ring" to the signal caused by the resonant circuit.

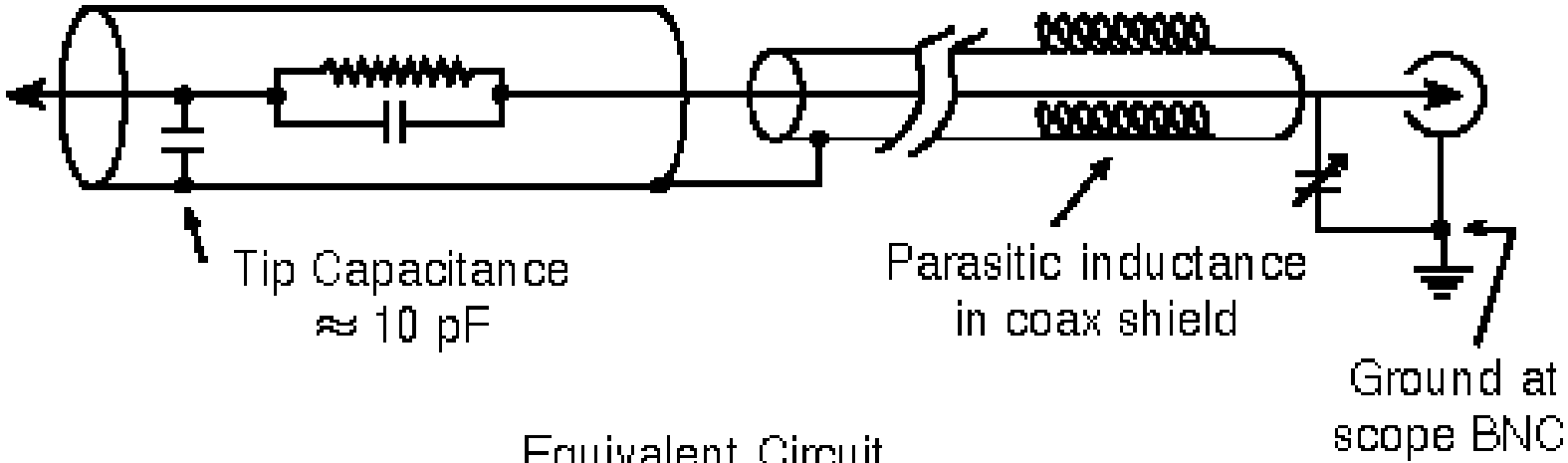

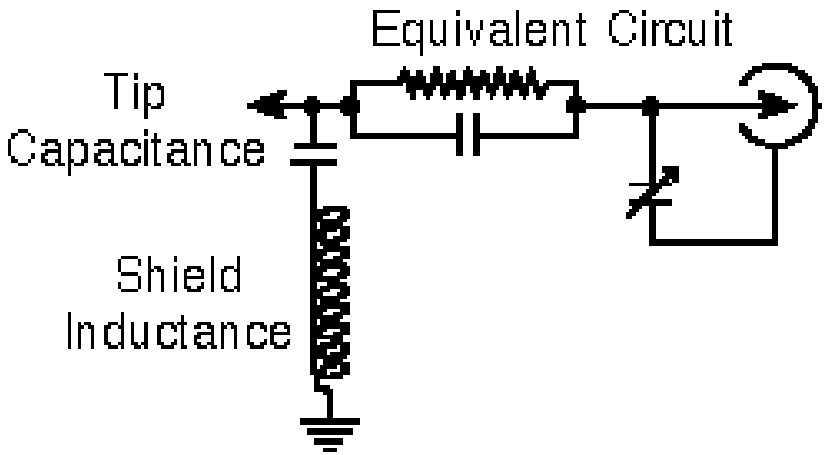

FLOATING SCOPE OR D.U.T ?

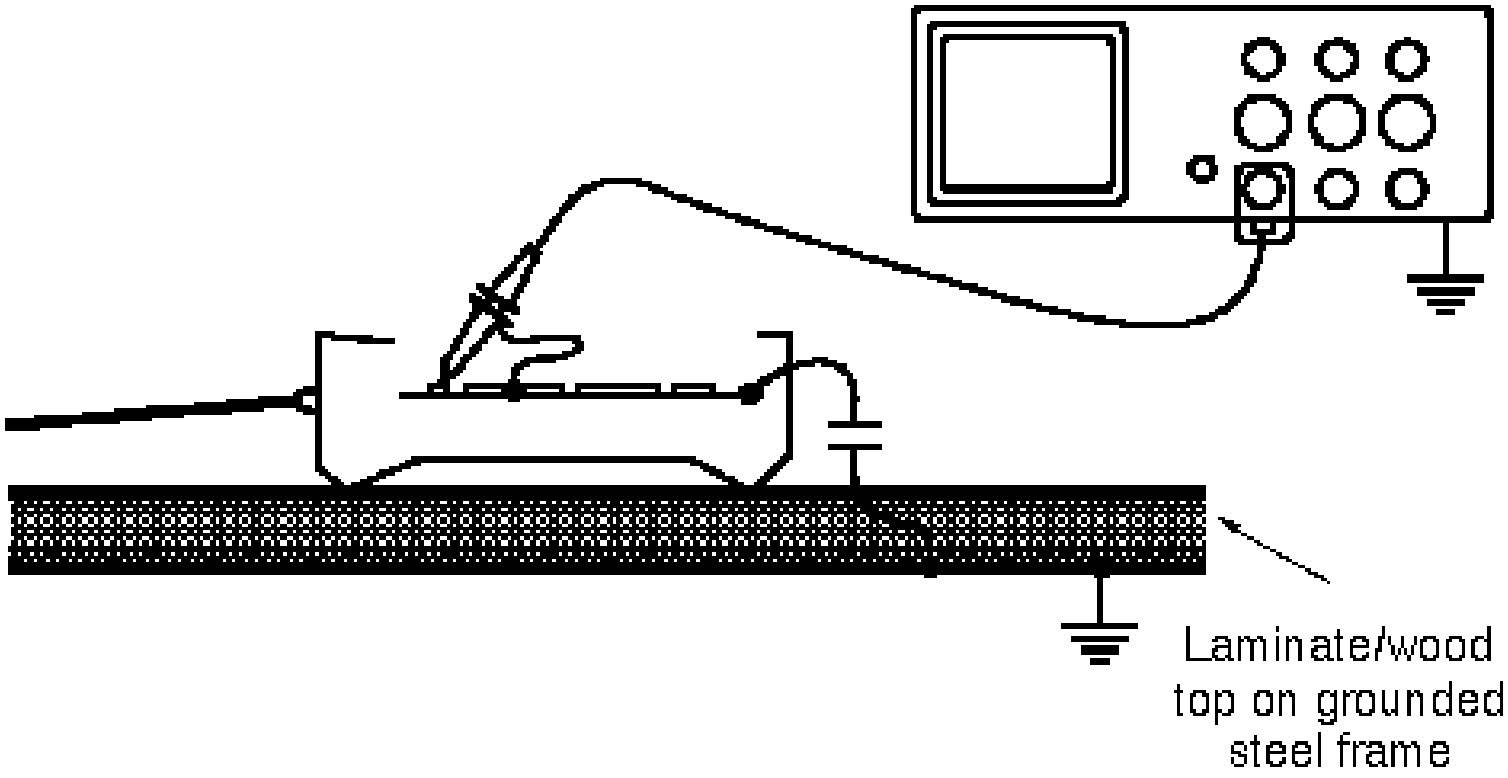

”Floating” battery-powered cellular telephone probed with a grounded oscilloscope. Capacitance between the phone circuitry and steel bench frame forms a virtual ground loop at high frequencies.

THEORETICAL SOLUTION

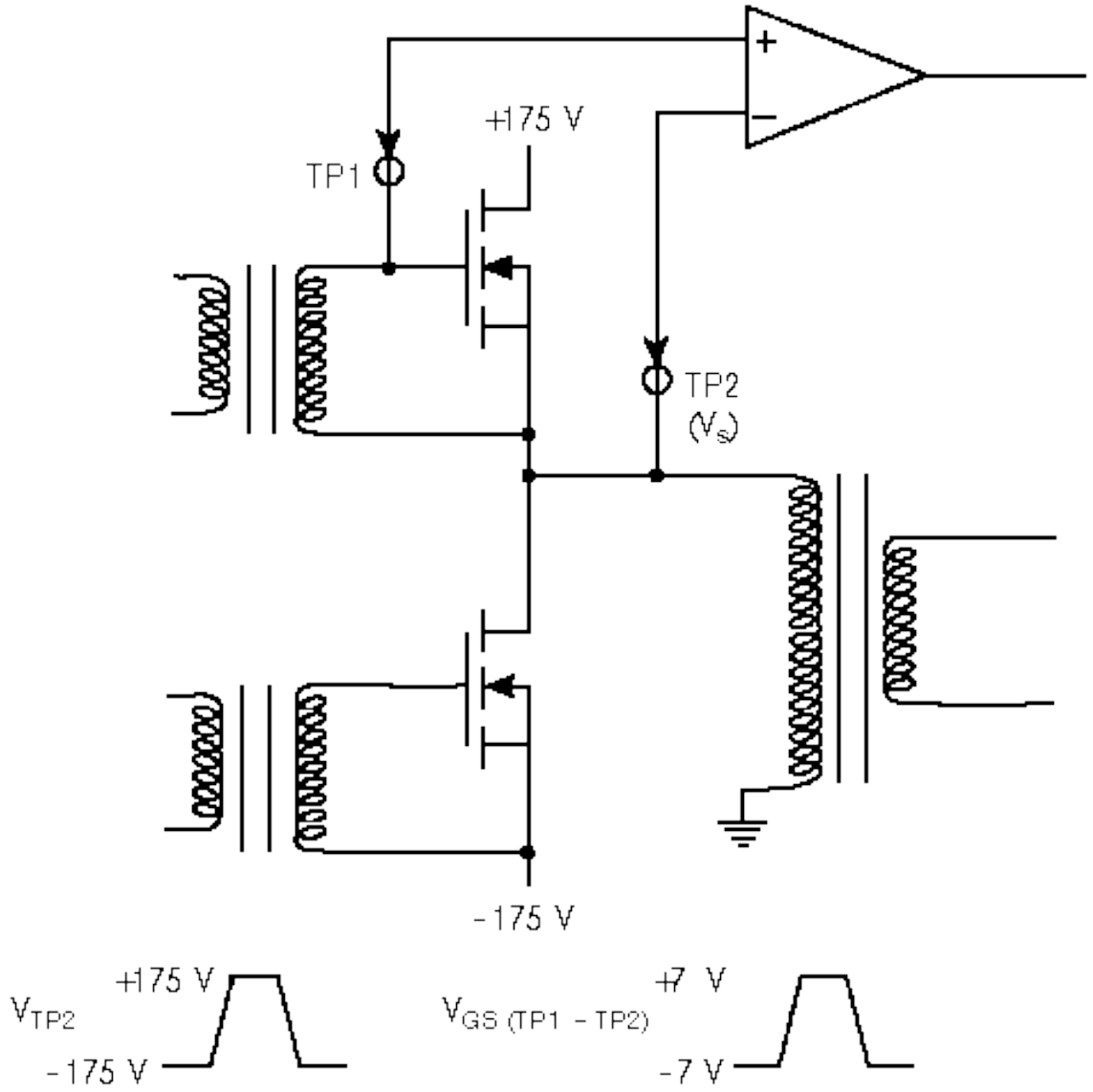

CMRR PROBLEM

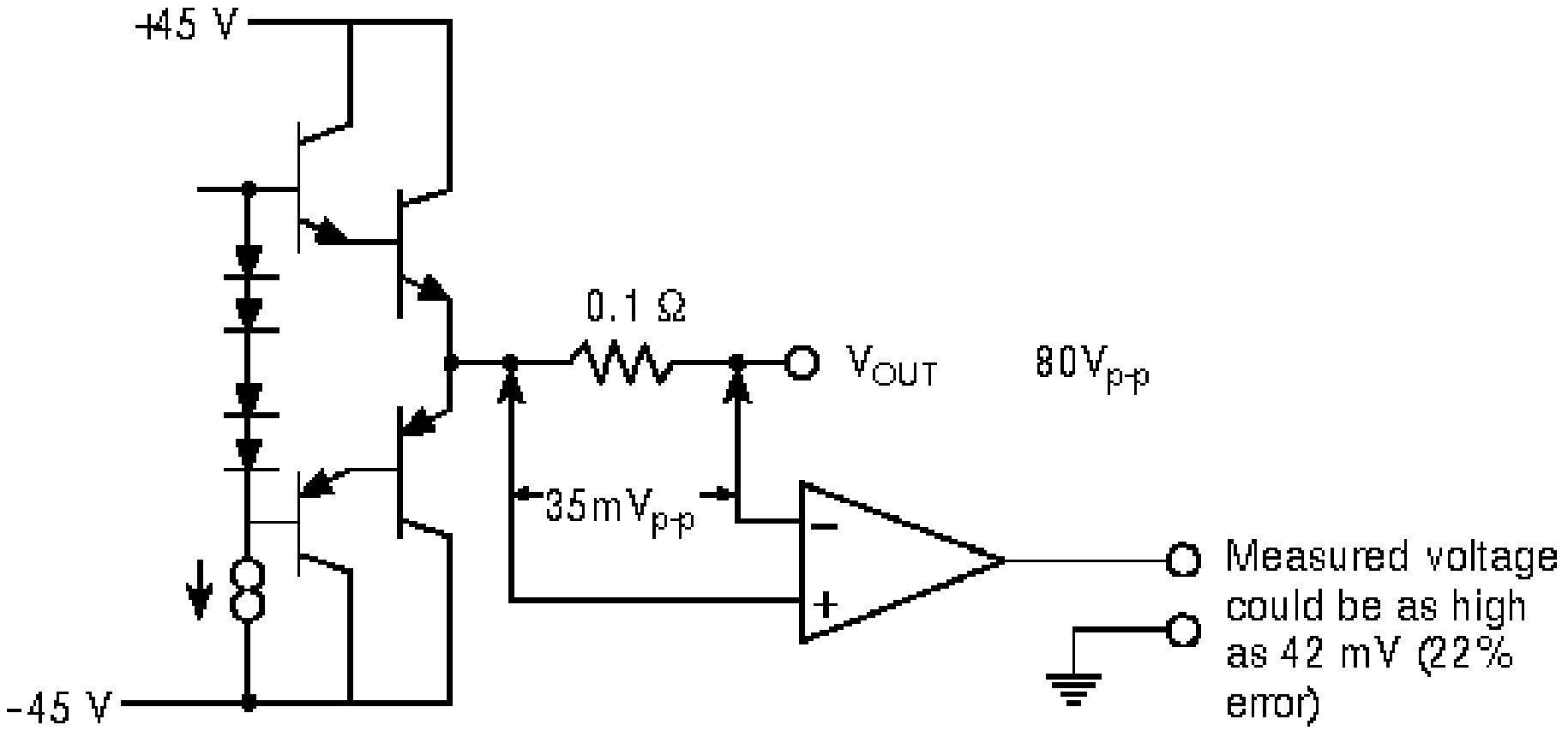

Common-mode error from a differential amplifier with 10,000:1 CMRR.

PRACTICAL CMRR TEST

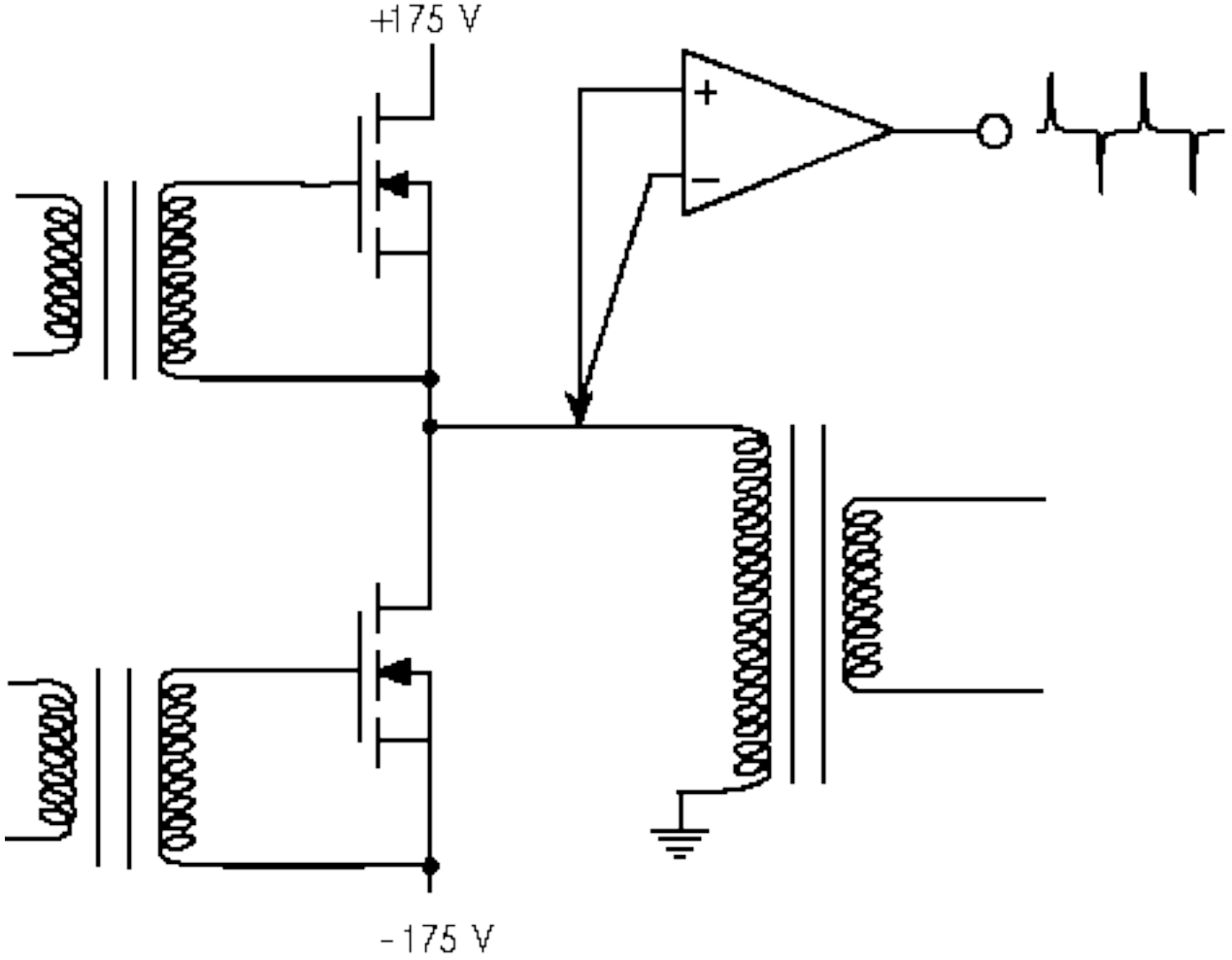

Residual common mode appears at the output. This test will not catch the effect of different source impedances.

USING TWO PROBES

Make "channel A - channel B".Both inputs must be set to the same scale factor, and both probes must be identical. The gain in both channels should be matched. Set one of the channels to "uncalibrated - variable" gain and adjust the variable-gain control until the displayed CAL waveform becomes a flat trace.

The primary limitation of this technique is the rather small common-mode range, which results from the scopes vertical channel dynamic range (less than ten times the volts/div setting from ground). The limited resolution of the analog-to-digital converter is often not adequate. Because the AC gain in the two channels is not precisely matched, CMRR at higher frequencies is rather poor.
This technique is suitable for 50 Hz common-mode signal.It effectively eliminates ground loops when measuring signals of moderate amplitude.

THE PROFESSIONAL WAY ?

- USING DEDICATED DIFFERENTIAL SCOPE PLUG-INS

WAYS TO SPOIL THE RESULT

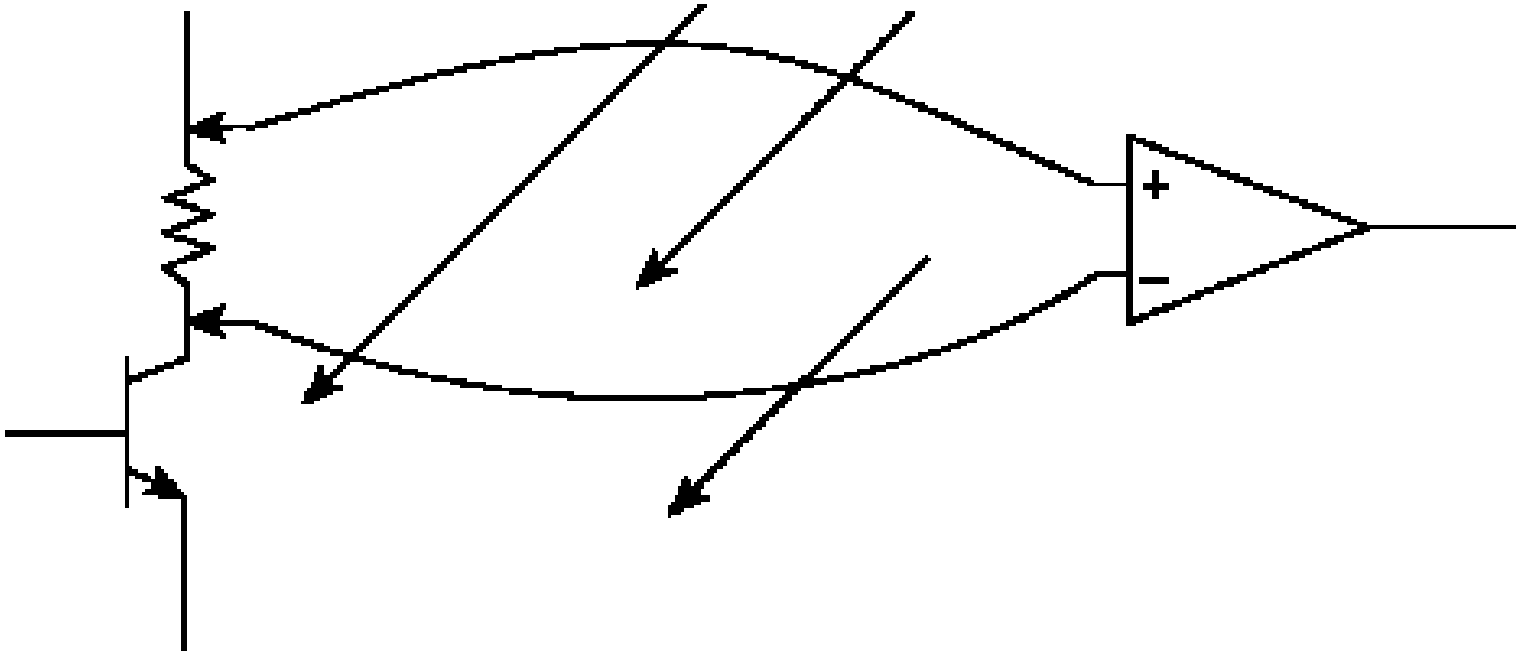

Time varying magnetic fields passing through the open leads induce a voltage. This voltage appears as a differential component to the amplifier and is summed into the true V_{dm} signal.

AN ALTERNATIVE !

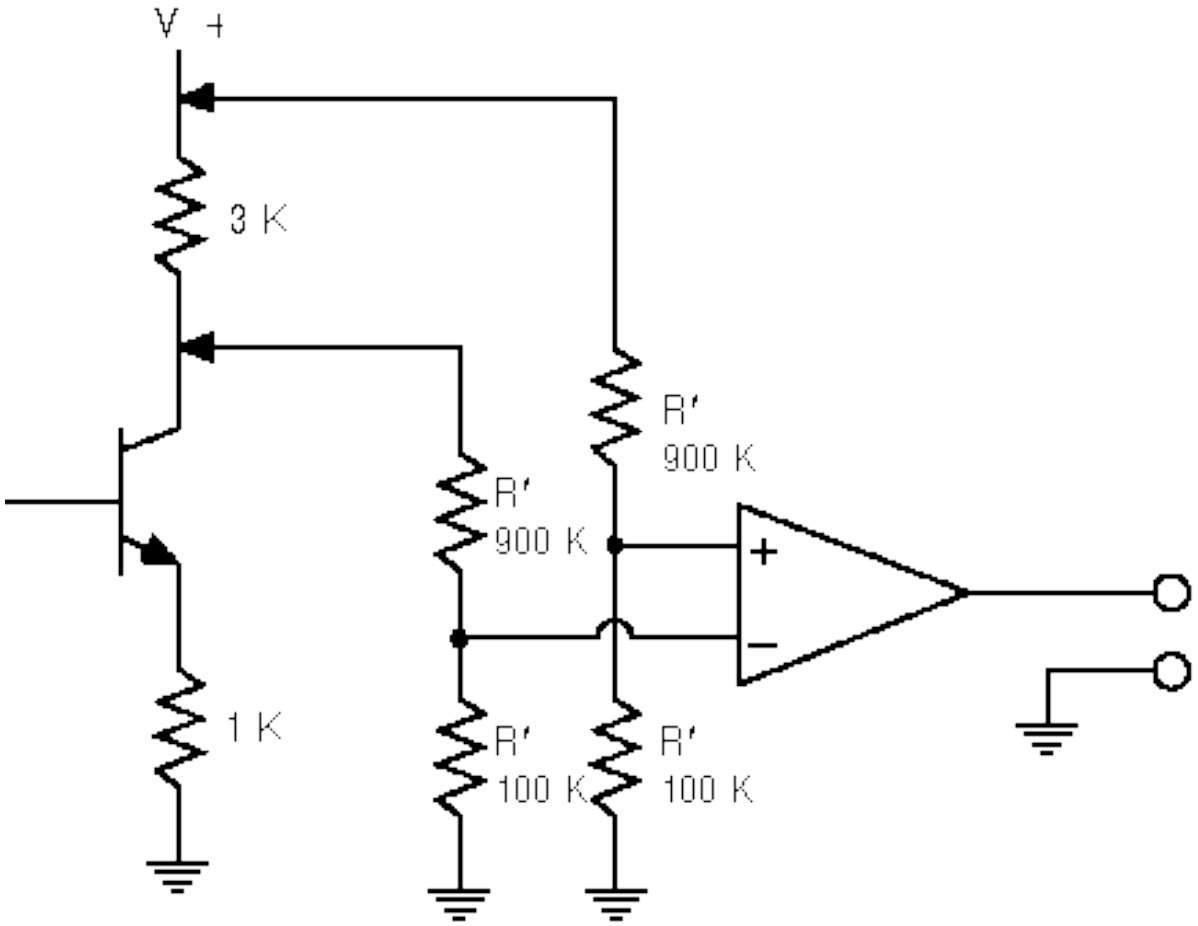

Effect of unequal source impedances. The + input attenuator is essentially driven from 0 ohms, however the - input attenuator is driven from something less than 3 kΩ.

DOUBLE ACTION MAKES THINGS WORSE

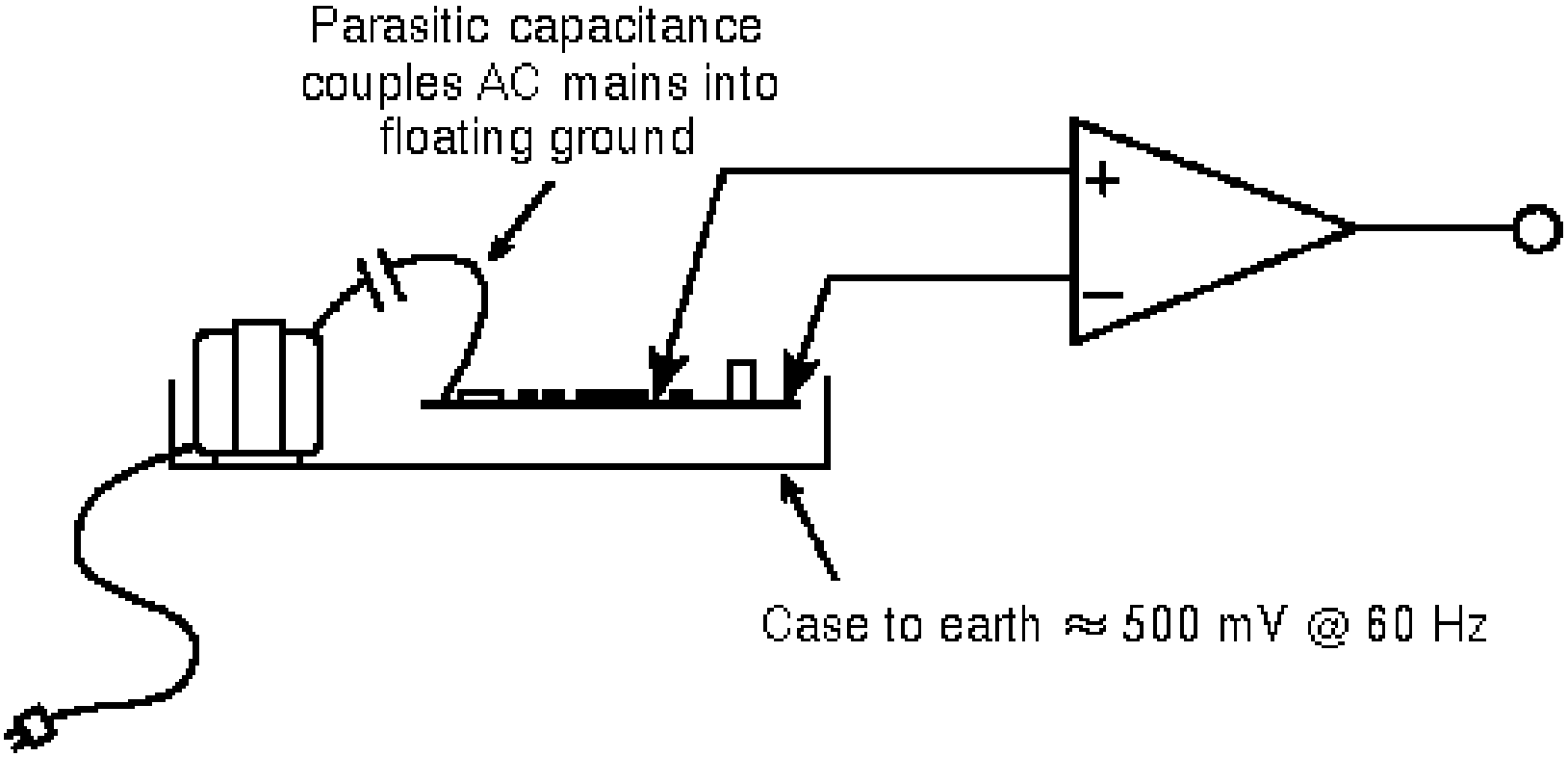

Floating battery-operated, consumer audio, and experimental physiological specimens pose a problem when being measured with a differential amplifier. Any AC fields in the area will be capacitively coupled into the device being measured. It is possible to inadvertently exceed the common-mode range of the amplifier.

USING HOLDOFF

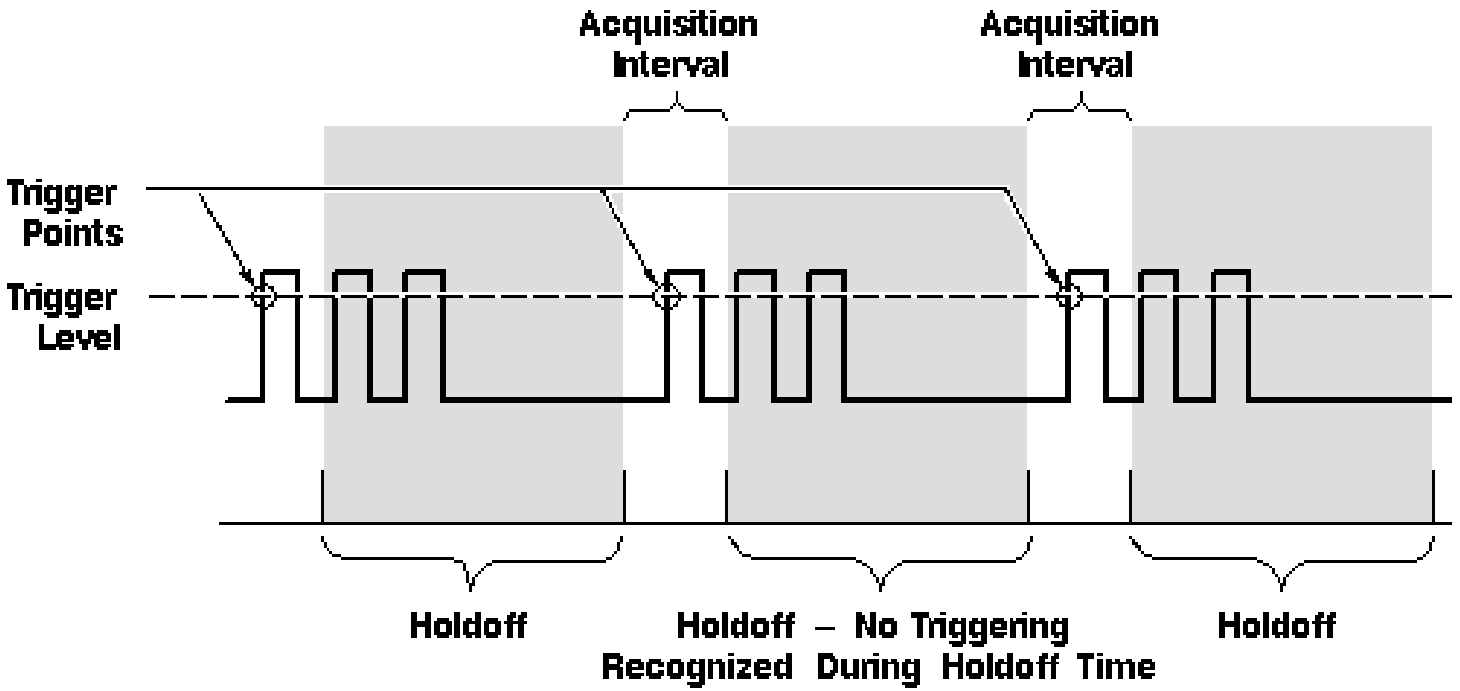

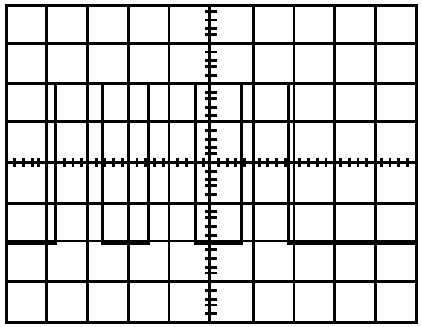

With Holdoff

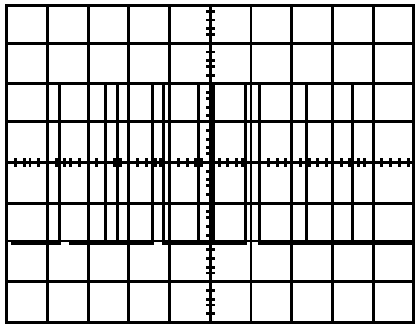

Without Holdoff

SAMPLING AND ITS ”MODES”

- Sample: The oscilloscope creates a waveform point by saving one sample point during each waveform interval.
- Peak Detect: The oscilloscope saves the minimum and maximum value sample points taken during two waveform intervals and uses these samples as the two corresponding waveform points. Peak detect mode is useful for seeing narrow pulses spaced far apart in time.
- Envelope Mode: The minimum and maximum waveform points from multiple acquisitions are combined to form a waveform that shows min/max changes over time.

COMMERCIAL SCOPE

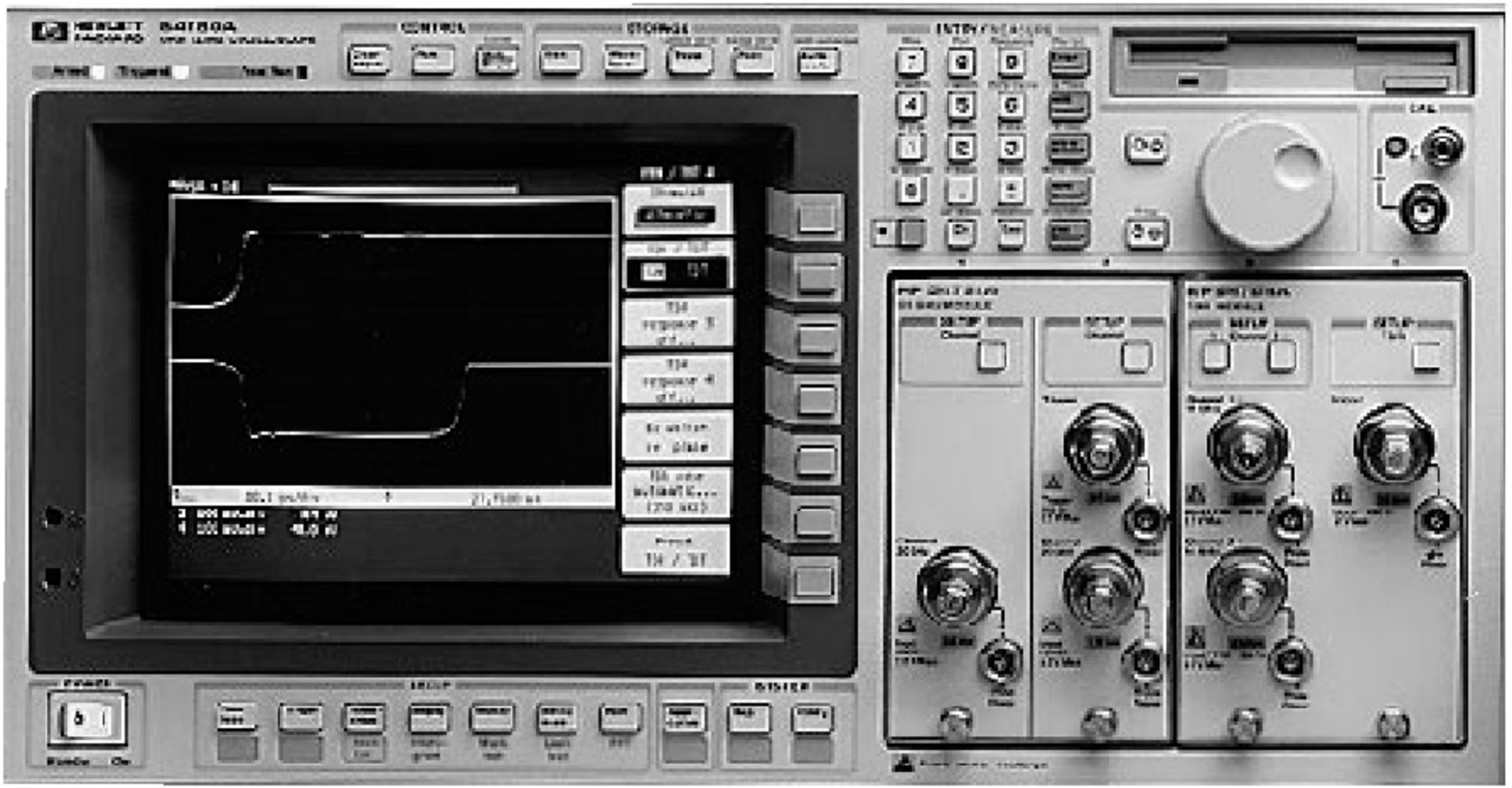

HP 54750A with plug-in modules

SPECIFICATIONS

Vertical	54751A	54752A/B	54753A	54754A
DC-coupled bandwidth (–3dB)				
High bandwidth				
Channel 1	20 GHz	50 GHz	18 GHz	18 GHz
Channel 2	20 GHz	50 GHz	20 GHz	18 GHz
Low bandwidth				
Channel 1	12.4 GHz	26.5 GHz	12.4 GHz	12.4 GHz
Channel 2	12.4 GHz	26.5 GHz	12.4 GHz	12.4 GHz
Rise time (calculated)				
High bandwidth				
Channel 1	≤ 17.5 ps	≤ 7.0 ps	≤ 19.4 ps	≤ 19.4 ps
Channel 2	≤ 17.5 ps	≤ 7.0 ps	≤ 17.5 ps	≤ 19.4 ps
Low bandwidth				
Channel 1	≤ 28.2 ps	≤ 13.2 ps	≤ 28.2 ps	≤ 28.2 ps
Channel 2	≤ 28.2 ps	≤ 13.2 ps	≤ 28.2 ps	≤ 28.2 ps
Noise (RMS)				
High bw	≤ 1 mV	≤ 1.5 mV	≤ 1 mV	≤ 1 mV
Low bw	≤ 0.5 mV	≤ 0.75 mV	≤ 0.5 mV	≤ 0.5 mV
DC accuracy (single voltage marker)	0.4% of full-scale or marker reading (whichever is greater) ± 2 mV ± 1.2% of (reading-channel offset)			
Dynamic range	± 400 mV relative to channel offset			

ANOTHER COMMERCIAL SCOPE

AND SPECIFICATIONS

	HP 54810A, 54815A, 54820A, 54825A
Bandwidth	500 MHz
Channels	HP 54810A/820A: 2 HP 54815A/825A: 4
Sample rate	HP 54810A/820A: 1 GSa/s on each channel HP 54815A/825A: 2 GSa/s on each channel
Memory/channel	32K
Vertical resolution	8 bits; 12 bits or greater with averaging
Input voltage ranges	1 mV/div to 5 V/div
Input Z, coupling	50Ω, 1 MΩ, dc, ac (1 MΩ), ground
Trigger enhancements	Edge, glitch, pattern, state, delay by time, delay video, line
Waveform update rate	>2,000 waveforms/sec

COMPETITOR

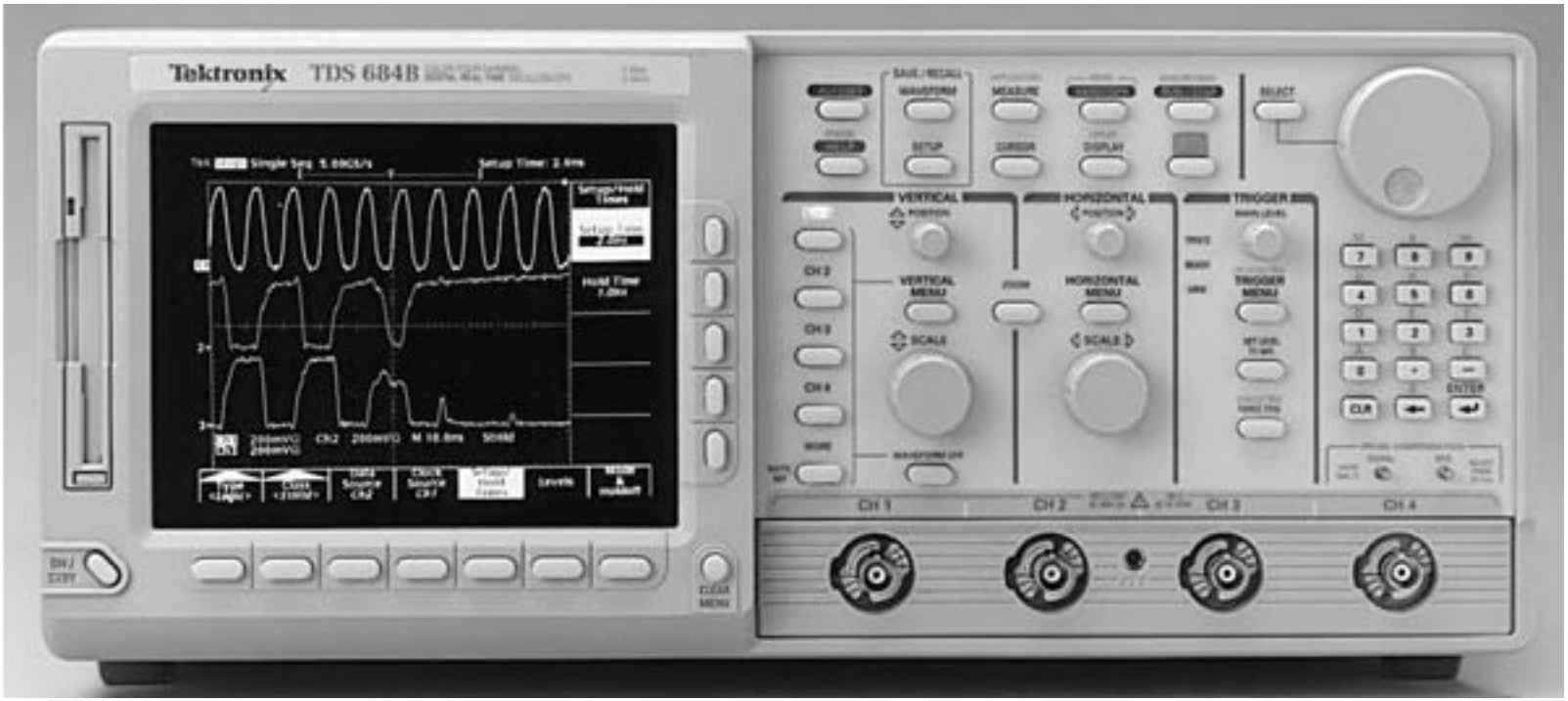
Tektronix TDS 684B
VERTICAL
HORIZONTAL
TRIGGER
CH 1
CH 2
CH 3
CH 4

AND ITS SPECIFICATIONS

- 1 GHz MHz Bandwidth
- 5 GS/s Sample Rate
- 4 Input Channels
- 8-Bit Vertical Resolution
- Greater than 11-Bits with Averaging
- Record Length to 15,000 Points
- 1 mV/div to 10 V/div Sensitivity
- 1.5% Vertical Accuracy
- Waveform Math and Advanced Waveform DSP
- 1 ns Peak Detect (not available w/TDS640A)
- Color VGA Display
- 3.5 in. DOS Format Floppy Drive
- RS-232, Centronics, GPIB and VGA I/O Ports

... CONTINUED

RECORD LENGTH	15 000 POINT
VERTICAL RESOLUTION	8 BITS
TIMING ACCURACY AT 5 GHz	50 ps
MINIMUM TIME/DIV	200 ps
CHANNEL ISOLATION	20 Db
OFFSET RANGE	10 X FULL SCALE
WAVEFORM SPEED	145 WFMS/SECOND

ELECTRIC POWER

- ONLY NON-MAINS ISSUES CONSIDERED
- DC POWER
- AUDIO POWER
- RF POWER
- CONTINUOUS AND MODULATED POWER

EXAMPLE: ANTENNA ROTATOR POWER

SO SIMPLE: MEASURE VOLTAGE AND CURRENT BUT TAKE CARE THAT THEY FORM A PROPER ”PAIR” FOR POWER

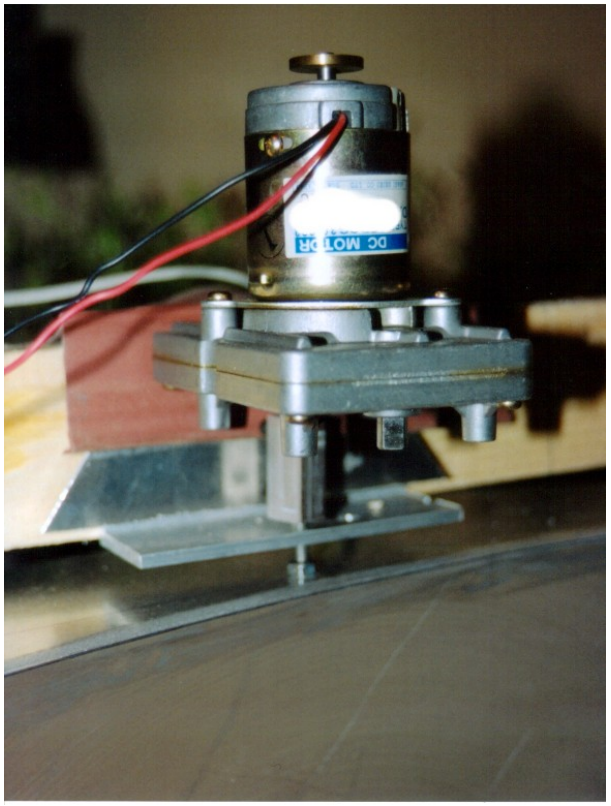

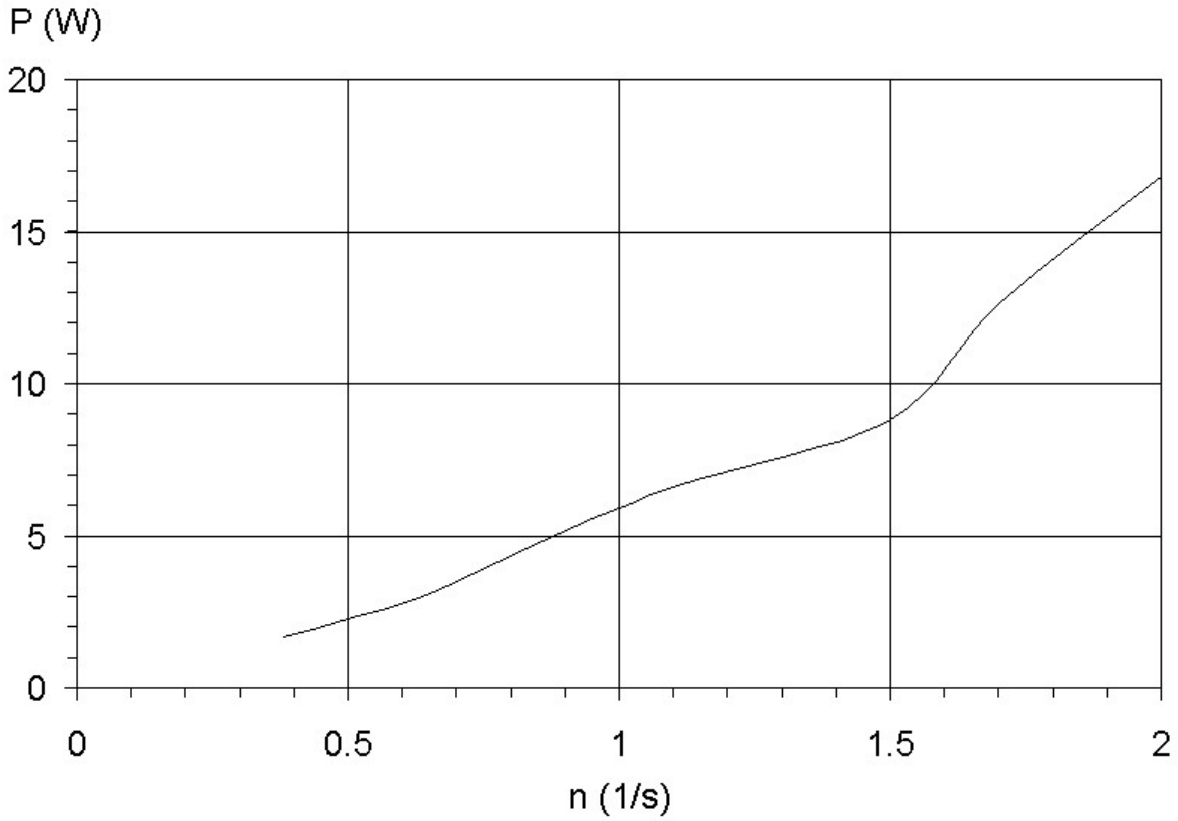

PROBLEMS START TO APPEAR

- POWER CAN BE MEASURED FROM VOLTAGE AND ASSOCIATED CURRENT
- WHAT IF THERE IS NO WELL-DEFINED CURRENT ?
- WHAT IS THE IMPEDANCE LEVEL IF WE USE ONLY VOLTAGE
- TRUE POWER STANDARDS EXIST FOR DC

COMMERCIAL RF POWER METERS

SPECIFICATIONS

Sensor check source	option NRVS-B1
Output power	1 mW ±0.7%
Frequency	50 MHz
VSWR	1.05
RF connector	N female

Model	Frequency range Min. pulse width Min. PRF	Power range Max. power	Max. SWR (reflection coefficient)	Zero offset (±)	Meter noise	Linearity uncertainty in dB	Calibration uncertainty in dB
NRV-Z54 N; 50 Ω	DC to 18 GHz	300 µW to 30 W 24 to 36 W (AVG) 1 kW (PK, 3 µs)	0.05 to 2 GHz: 1.11 (0.052) >2 to 8 GHz: 1.22 (0.099) >8 to 12.4 GHz: 1.27 (0.119) >12.4 to 18 GHz: 1.37 (0.157)	20 µW	7 µW	0.03 + 0.007 P/W	0.08 0.10 to 0.11 0.12 to 0.13 0.14 to 0.18
NRV-Z55 K; 50 Ω	DC to 40 GHz	1 µW to 100 mW 300 mW (AVG) 10 W (PK, 1 µs)	DC to 2 GHz: 1.1 (0.048) >2 to 12.4 GHz: 1.15 (0.07) >12.4 to 18 GHz: 1.2 (0.08) >18 to 26.5 GHz: 1.25 (0.11) >26.5 to 40 GHz: 1.30 (0.13)	60 nW	22 nW	0.02	0.05 0.06 to 0.08 0.10 to 0.13 0.08 to 0.09 0.10 to 0.11

COMPETITOR

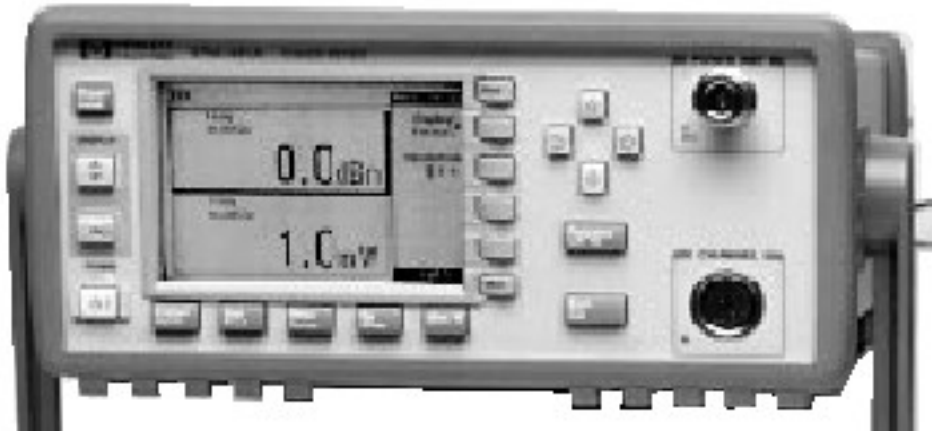

SPECIFICATIONS

100 mW Sensors 1 µW to 100 mW (–30 to +20 dBm)

8485A	50 MHz to 26.5 GHz	50 to 100 MHz: 1.15 100 MHz to 2 GHz: 1.10 2 to 2.4 GHz: 1.15 12.4 to 18 GHz: 1.20 18 to 26.5 GHz: 1.25	+10 to +20 dBm; +2, –4%
Option 033	50 MHz to 33 GHz	26.5 to 33 GHz: 1.40	
8481A	10 MHz to 18 GHz	10 to 30 MHz: 1.40 30 to 50 MHz: 1.18 50 MHz to 2 GHz: 1.10 2 to 12.4 GHz: 1.18 12.4 to 18 GHz: 1.28	
8482A	100 kHz to 4.2 GHz	100 to 300 kHz: 1.60 0.3 to 1 MHz: 1.20 1 MHz to 2 GHz: 1.10 2 to 4.2 GHz: 1.30	

MORE SPECIFICATIONS

Best SWR in the Industry

Mismatch uncertainty is usually the largest single source of error in power measurements. The HP 8480 power sensor family gives you extremely low SWR even at mm-wave frequencies. For example, the HP W8486A power sensor has a specified SWR of less than 1.08:1 over its entire 75 to 110 GHz frequency range. This low SWR translates into minimum mismatch uncertainty and optimum measurement accuracy.

Accurate Calibration and Traceability

Each power sensor in the HP 8480 family is individually calibrated and traceable to the U.S. National Institute of Standards and Technology (NIST, formerly NBS). The uncertainty in this calibration factor is your link to NIST. The cal factor measurement system used by HP Standards Lab provides you with minimum cal factor uncertainty.

THE HAND EFFECT

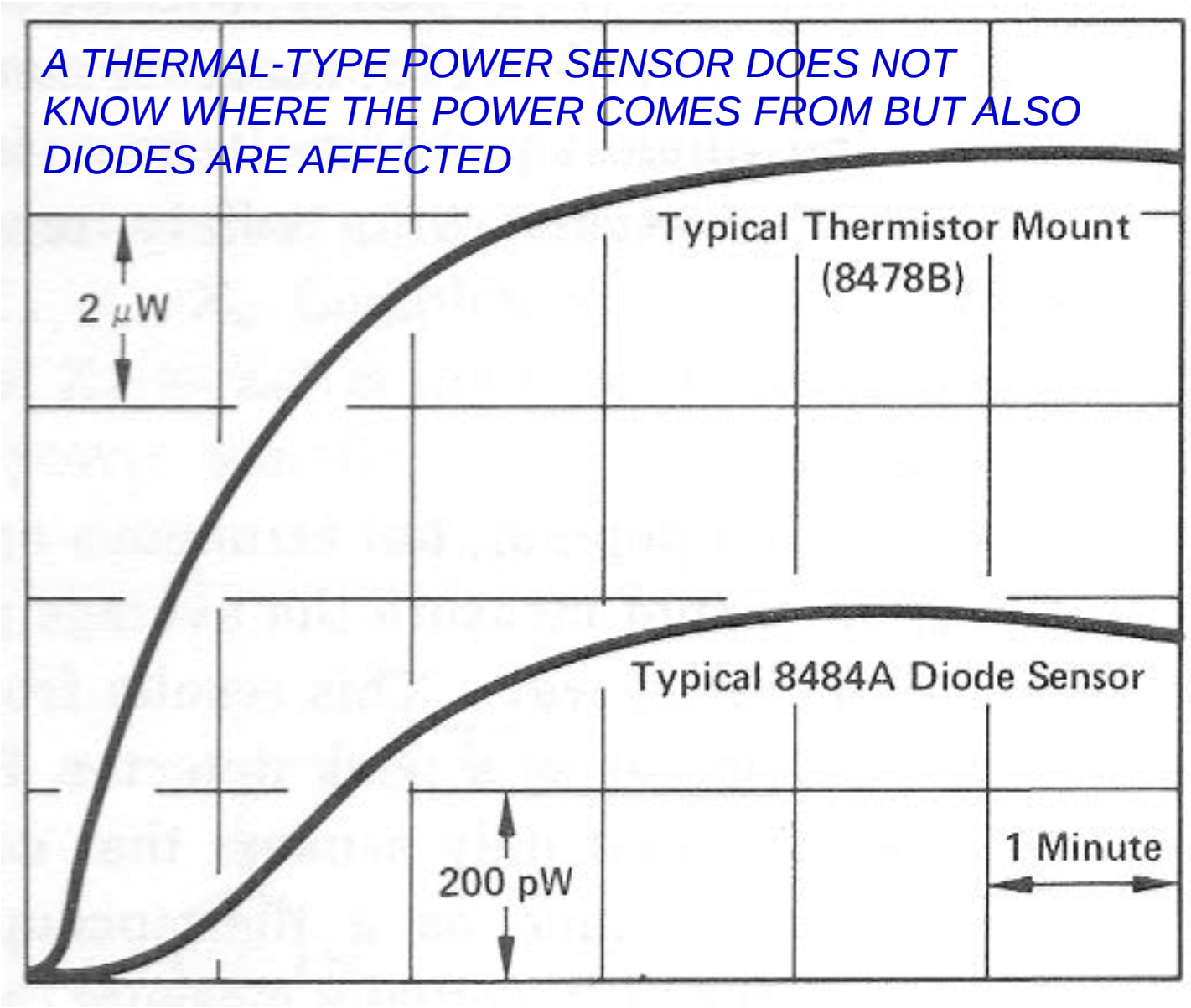

THE SWR EFFECT

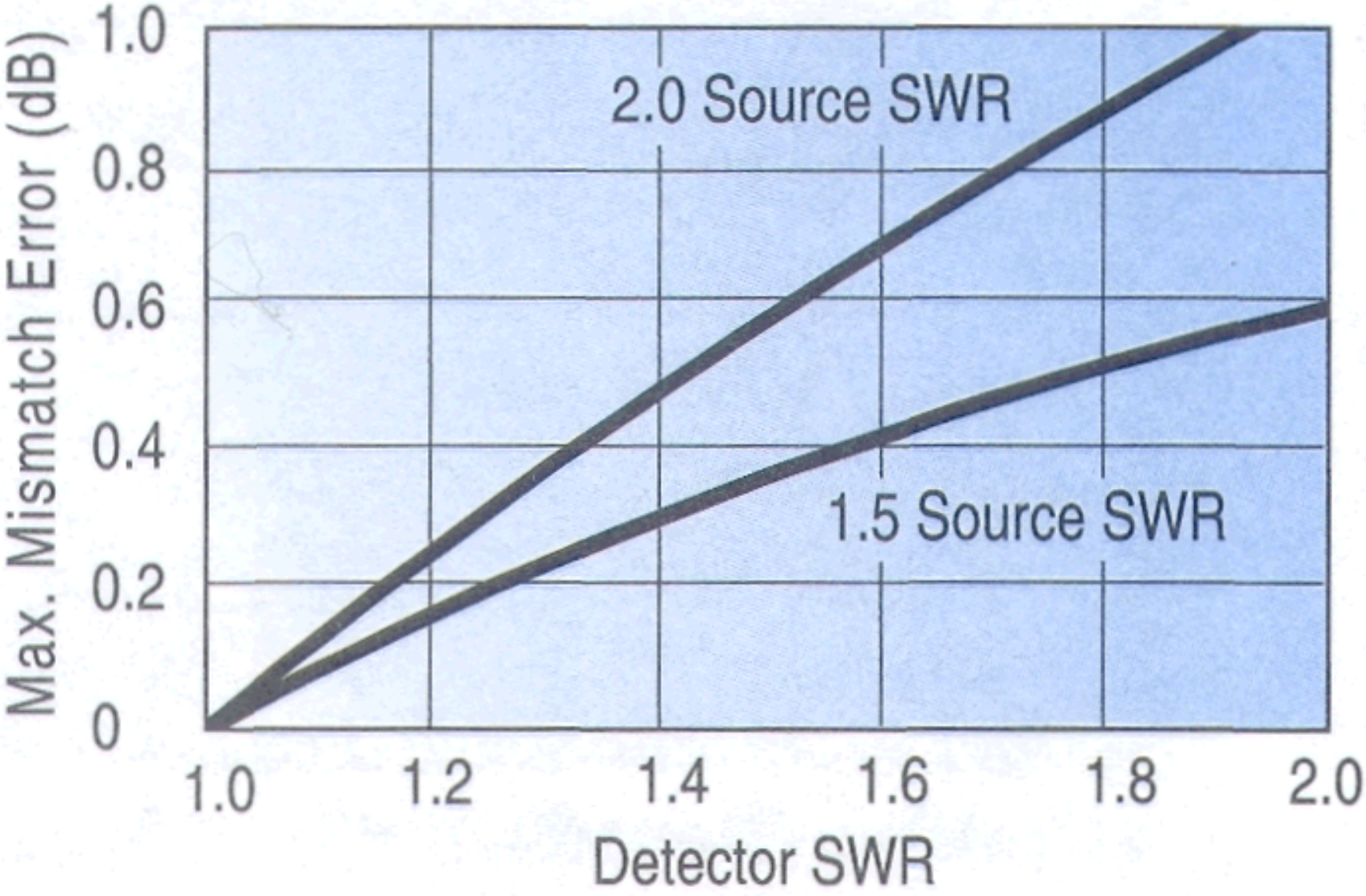

LOAD **AND** SOURCE SWR

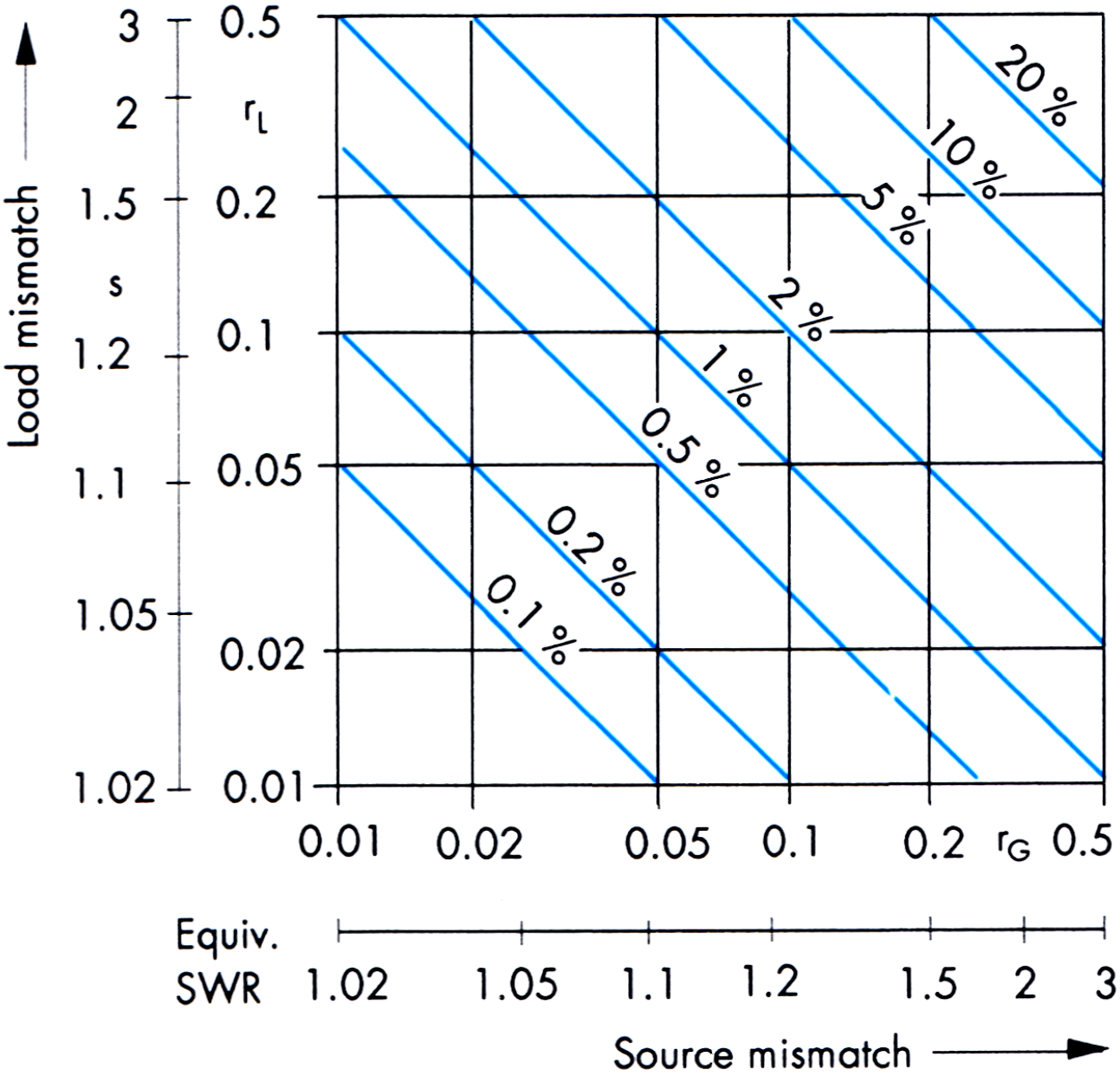

ERROR BUDGET FOR POWER METERS

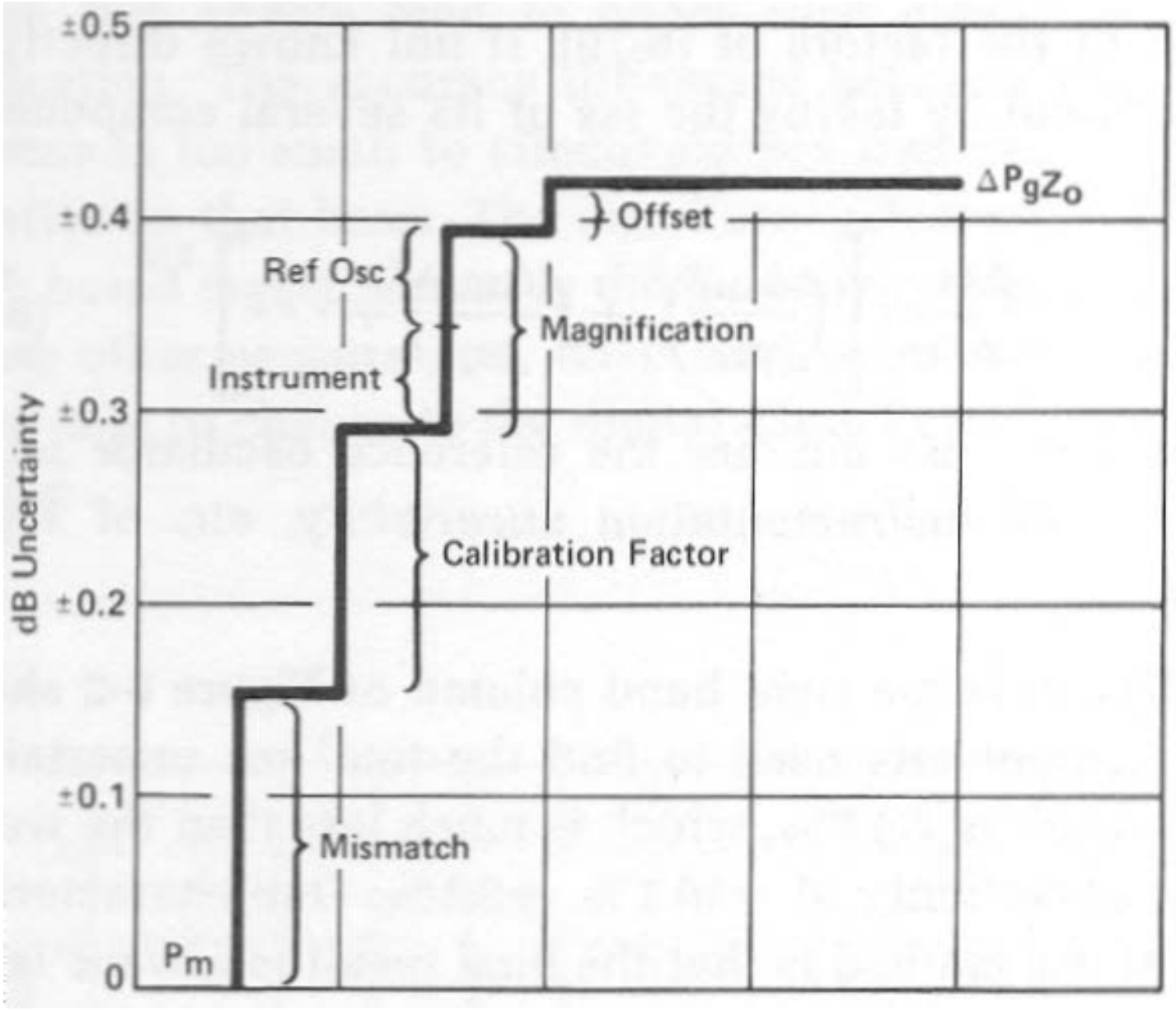

POWER METER CALIBRATION

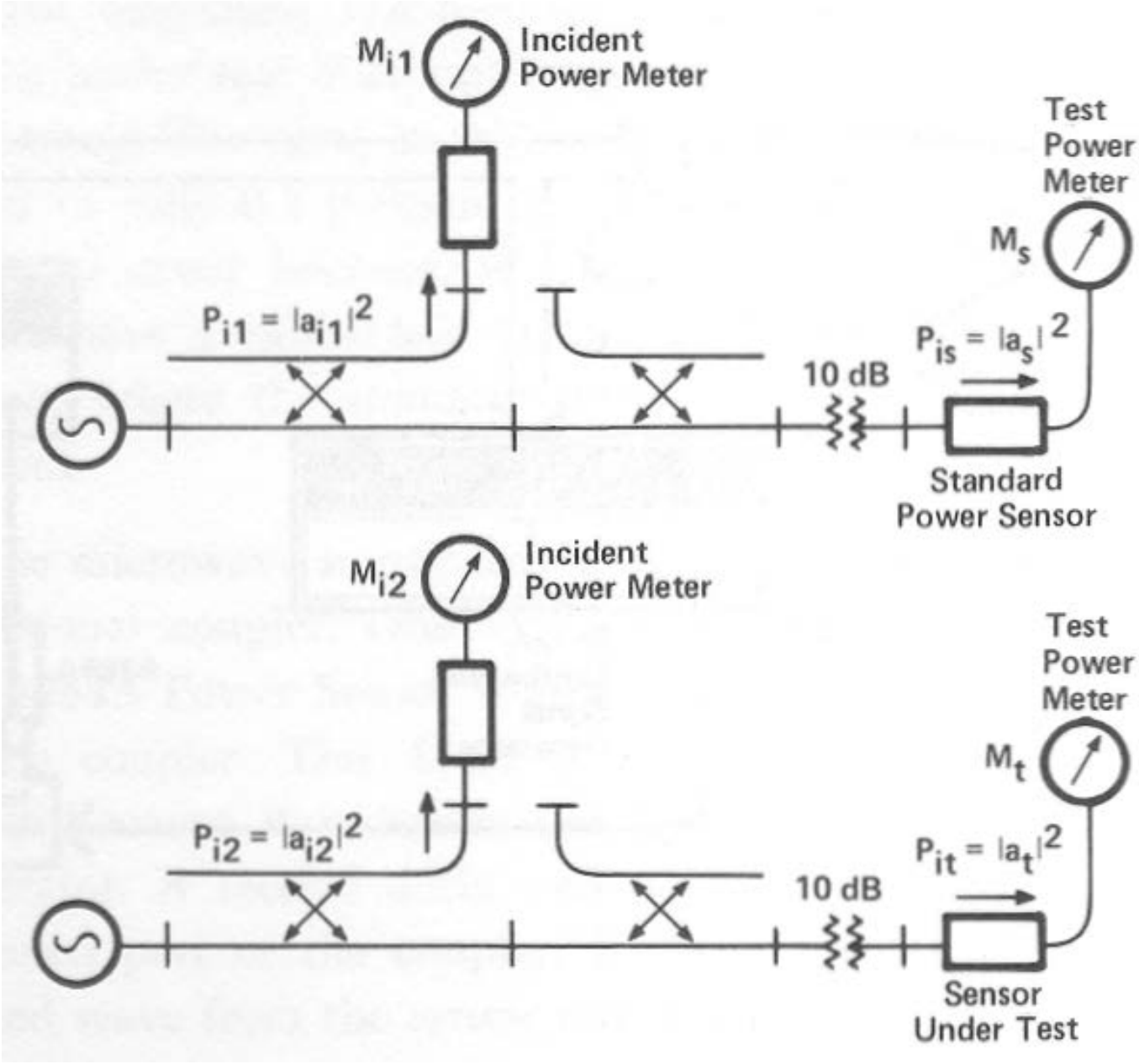

SEE SEPARATE THEMATIC ARTICLE POWER_SENSOR.PDF FOR FURTHER DISCUSSIONS

USING A GENERATOR AS A POWER REFERENCE

SPECIFICATIONS

Level

Range	–144 dBm to +13 dBm
Overrange (specs not binding)	up to 16 dBm
Resolution	0.1 dB
Total error for levels >–127 dBm [1)]	
f <2 GHz	<0.5 dB
f >2 GHz to 4 GHz	<0.9 dB
f >4 GHz	<1.2 dB
Level flatness at 0 dBm [1)]	
f ≤3 GHz	<1 dB
f >3 GHz	<1.5 dB
Output impedance	50 Ω

1) Does not apply to non-interrupting level setting (ATTENUATOR MODE FIXED and USER CORR).

COMPETITOR

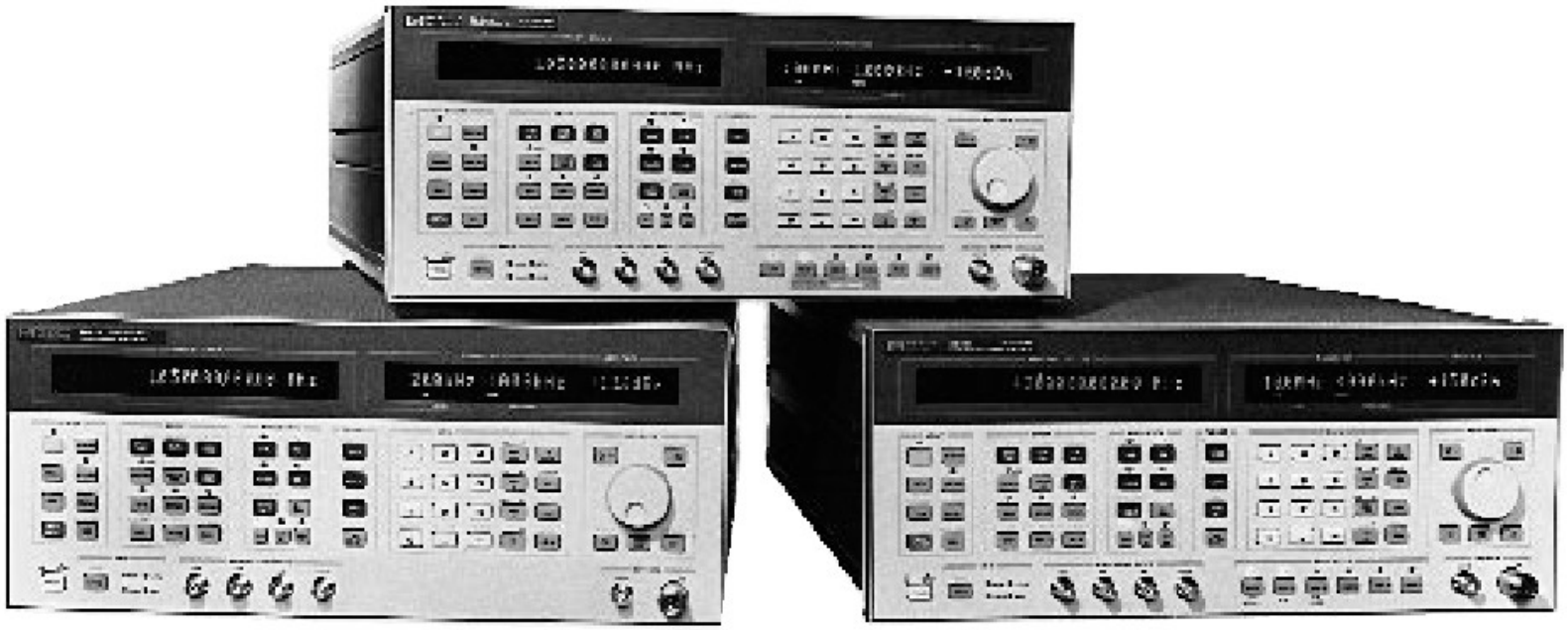

HP 8643A, 8644B, 8665B

SPECIFICATIONS

Output Level	
Range	+ 13 to –137 dBm
Resolution	0.1 dB
Absolute accuracy	± 1 dB, output ≥ –127 dBm

TRIPLE DEVICE STRATEGY

TWO SOURCES PLUS ONE METER OR ONE SOURCE AND TWO METERS ALLOWS SOME VOTING TO HAPPEN

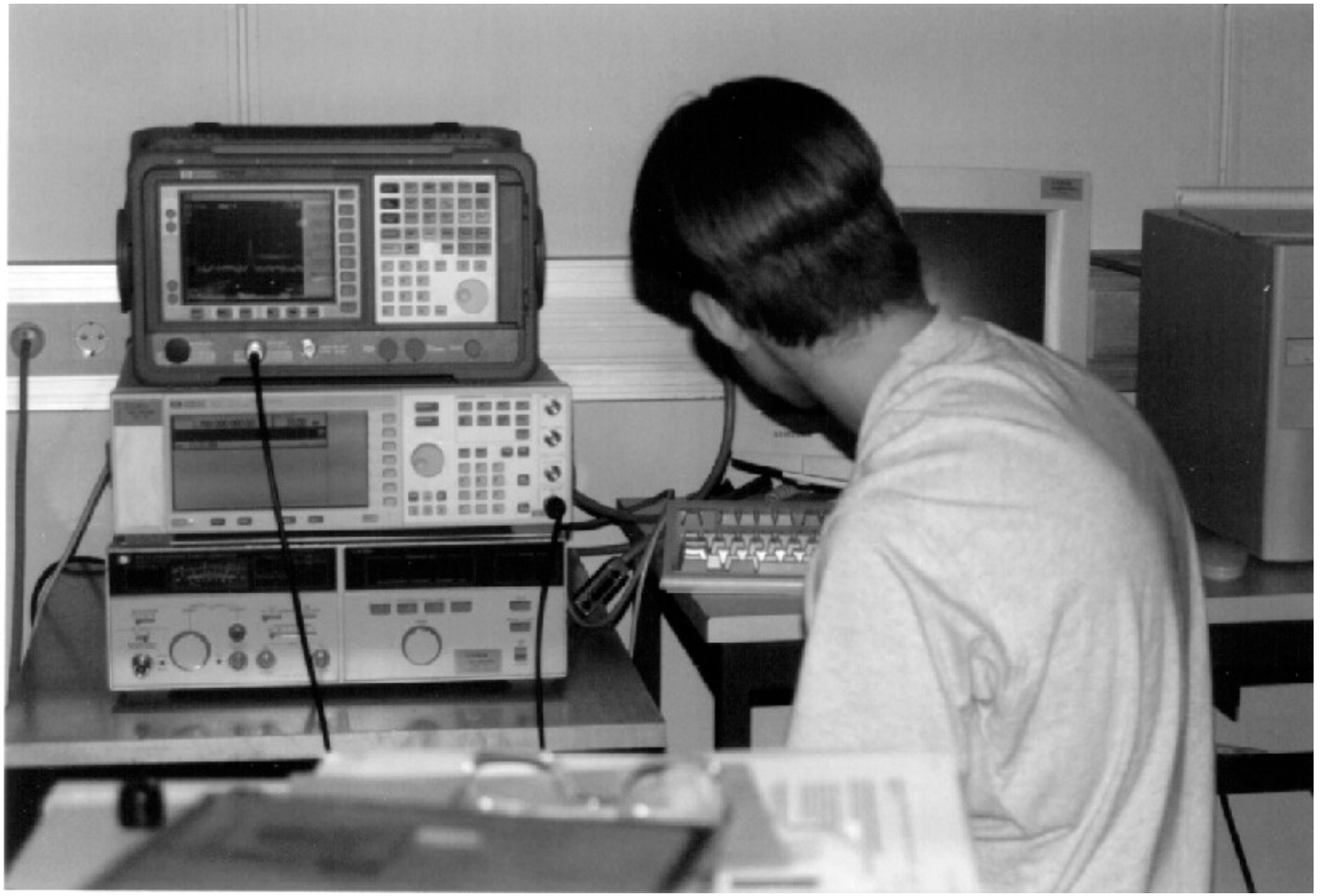

PULSED, SWEPT FREQUENCY POWER

A LOT OF HARDWARE IS NEEDED FOR THIS TASK

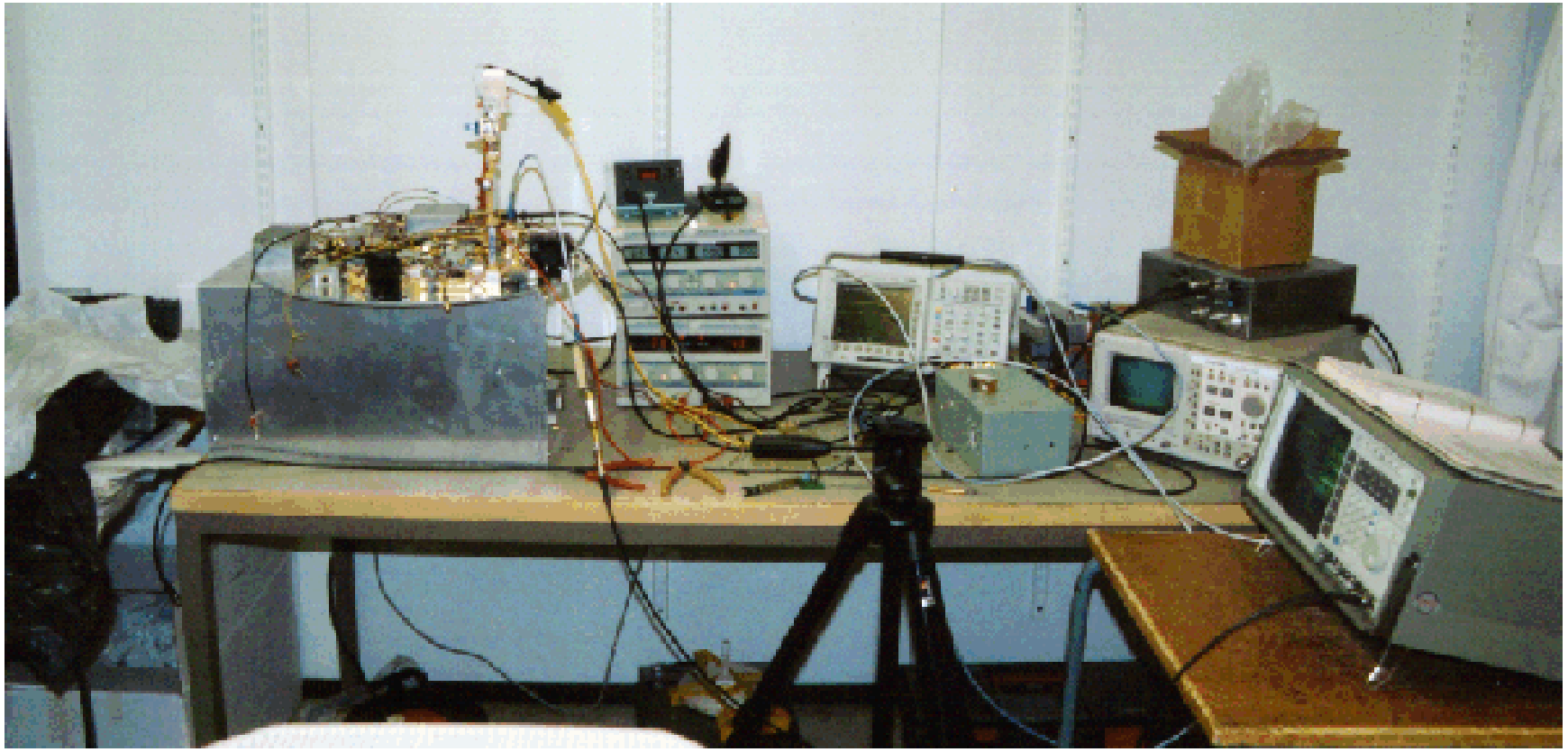

SPECTRUM ANALYZER RESULT

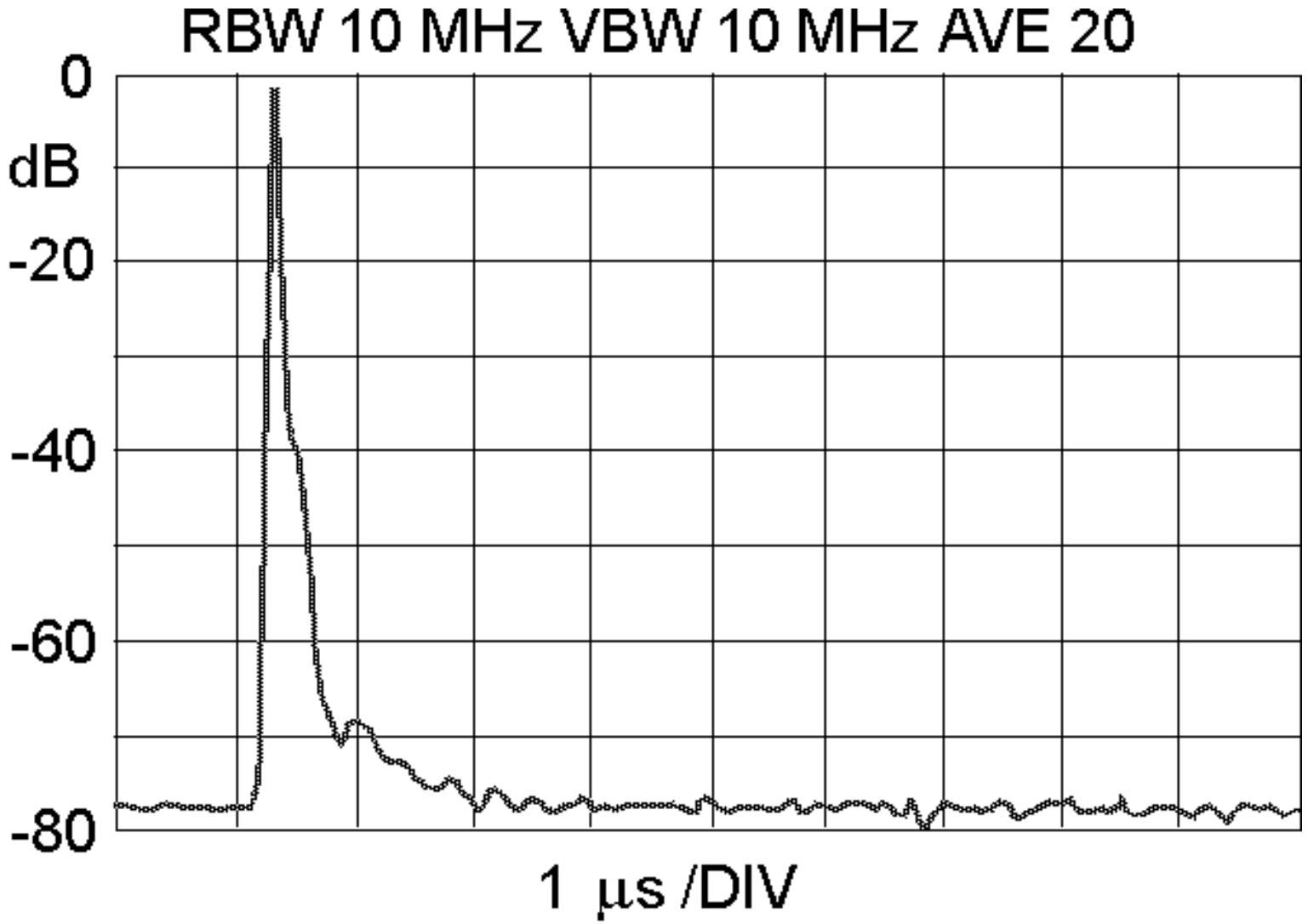

A DIODE DETECTOR FOR HF POWER

$$T_r\ (10\%\ \text{to}\ 90\%) = \frac{2.2 * R_L * R_v * (C_L + C_b)}{R_L + R_v} = \frac{0.35}{BW}$$

Where	Determined by
R_L = Load Impedance	Measuring Equipment
R_v = Video Impedance	Detector
C_L = Load Capacitance	Measuring Equipment
C_b = Bypass Capacitance	Detector

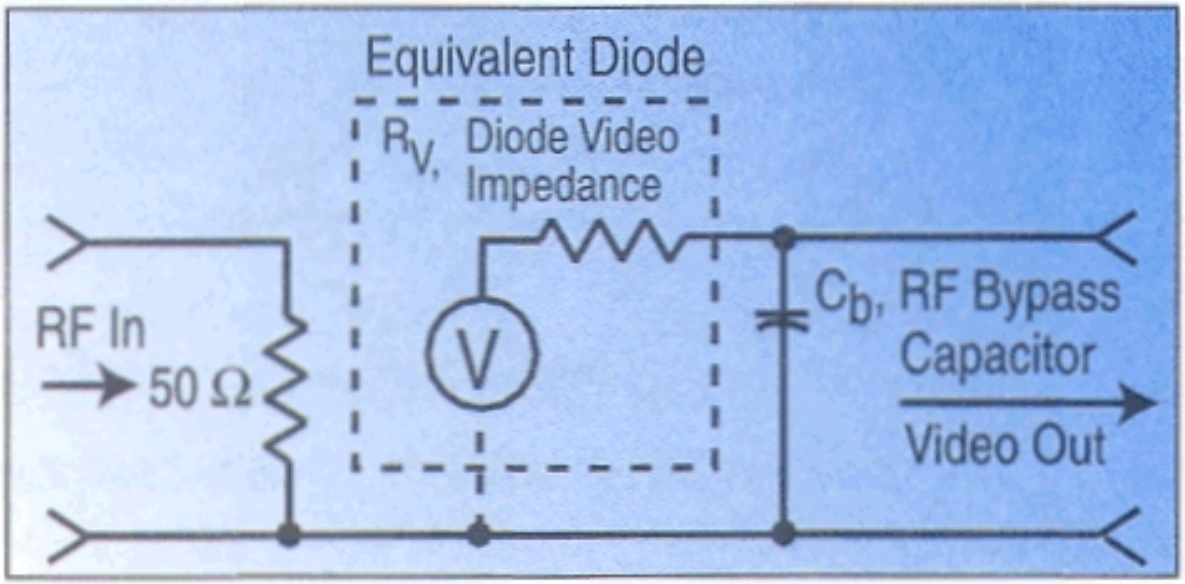

DIODE CHARACTERISTICS

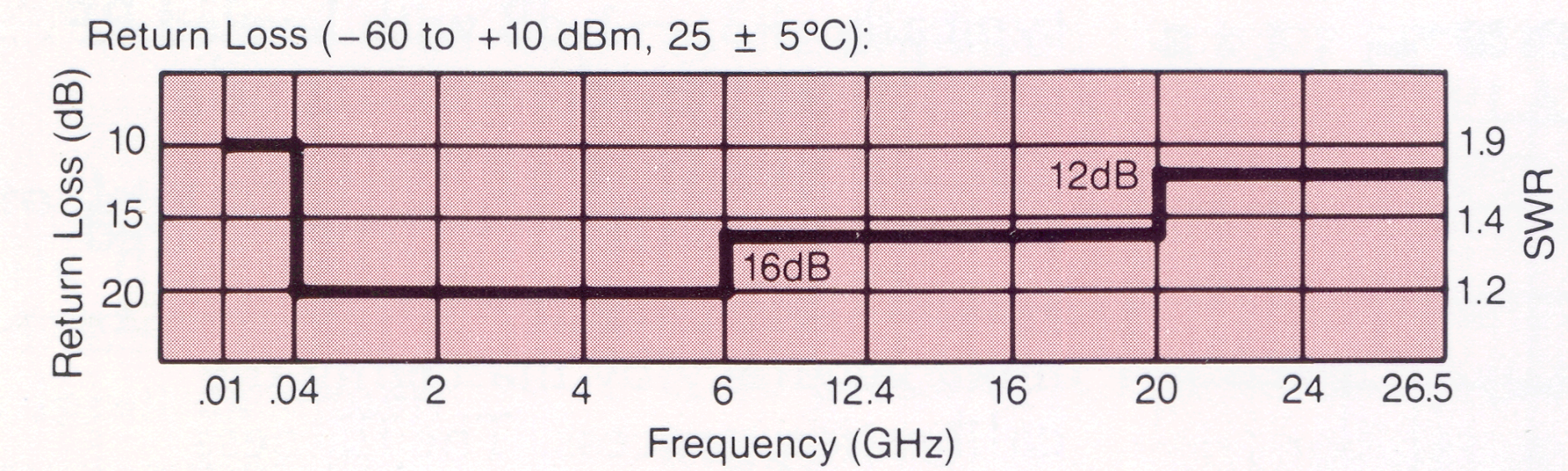

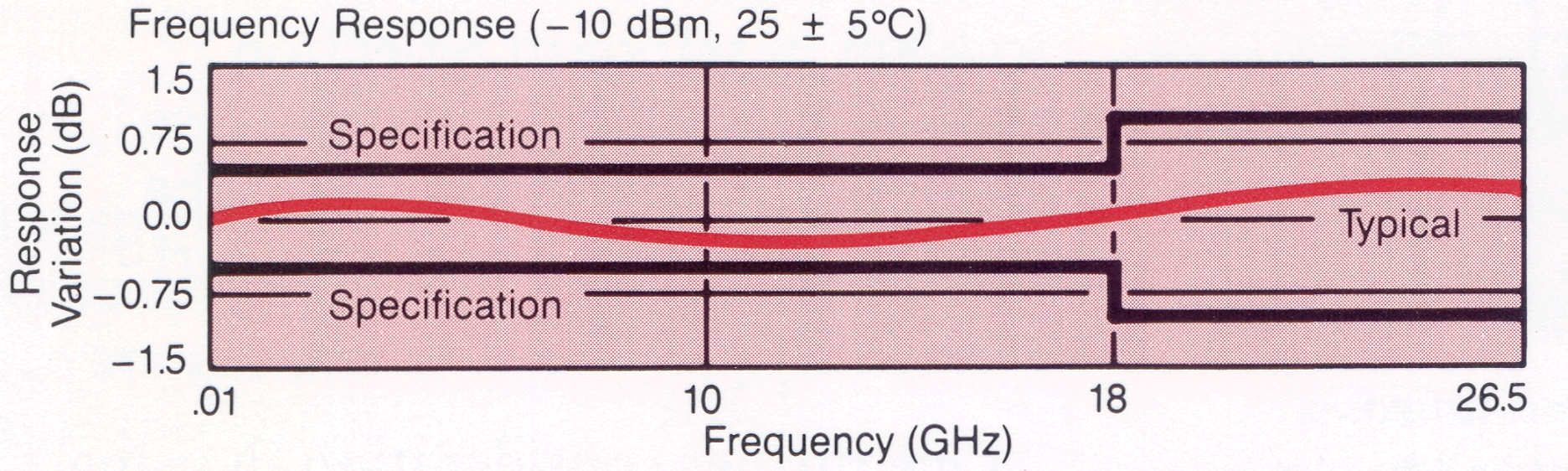

DIODE RESPONSE

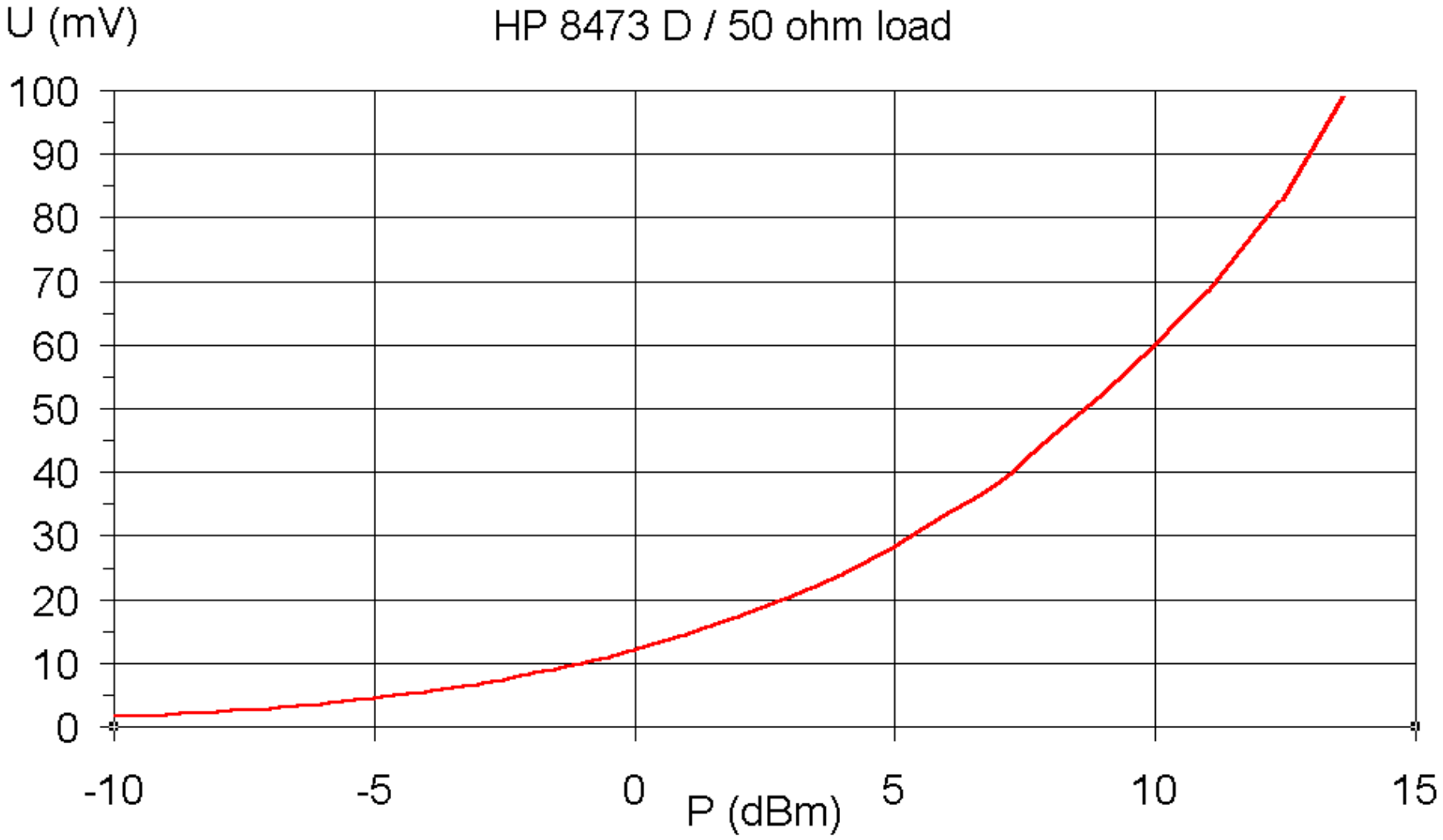

TIME DOMAIN RESULT

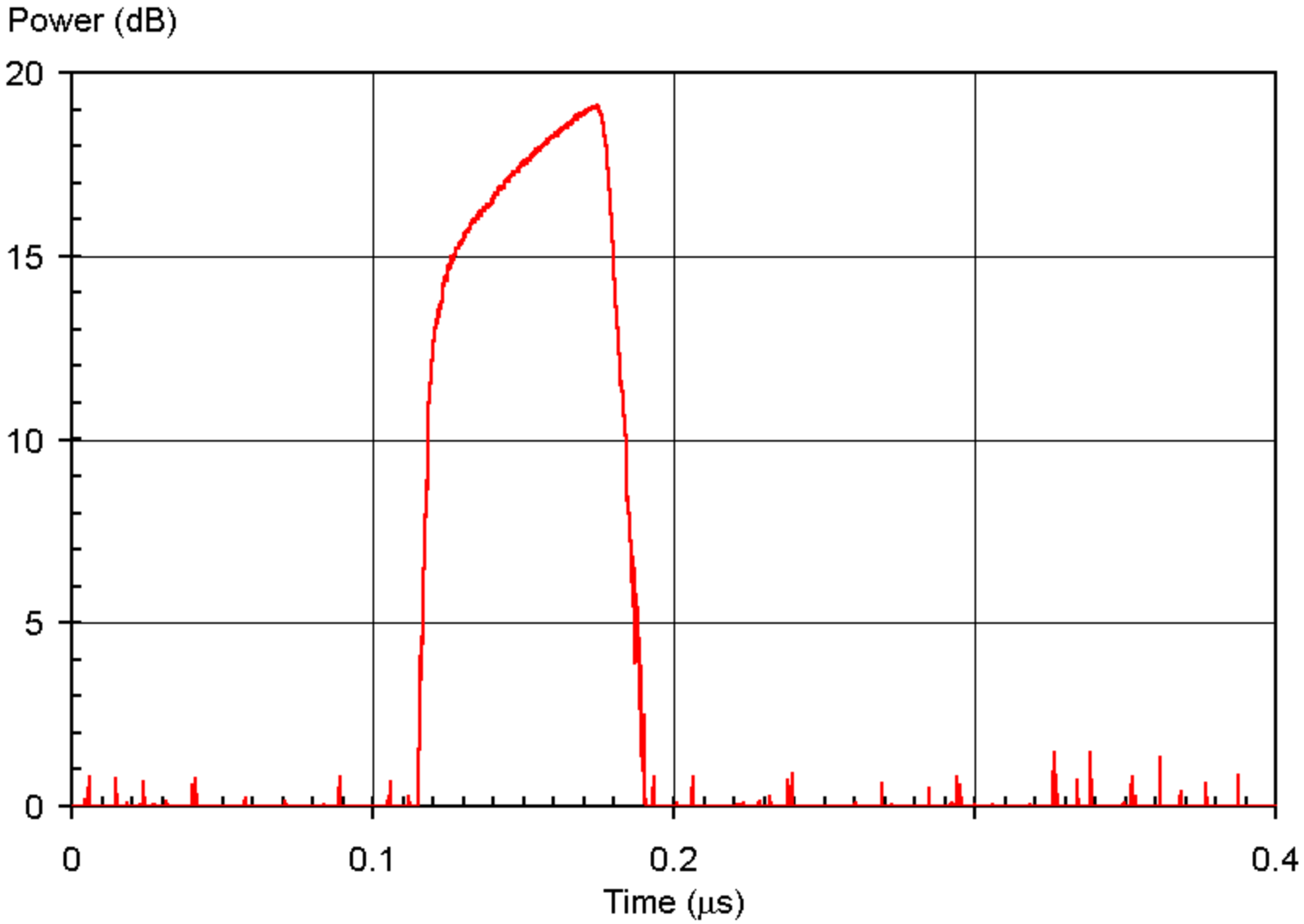

A SPECIAL POWER METER

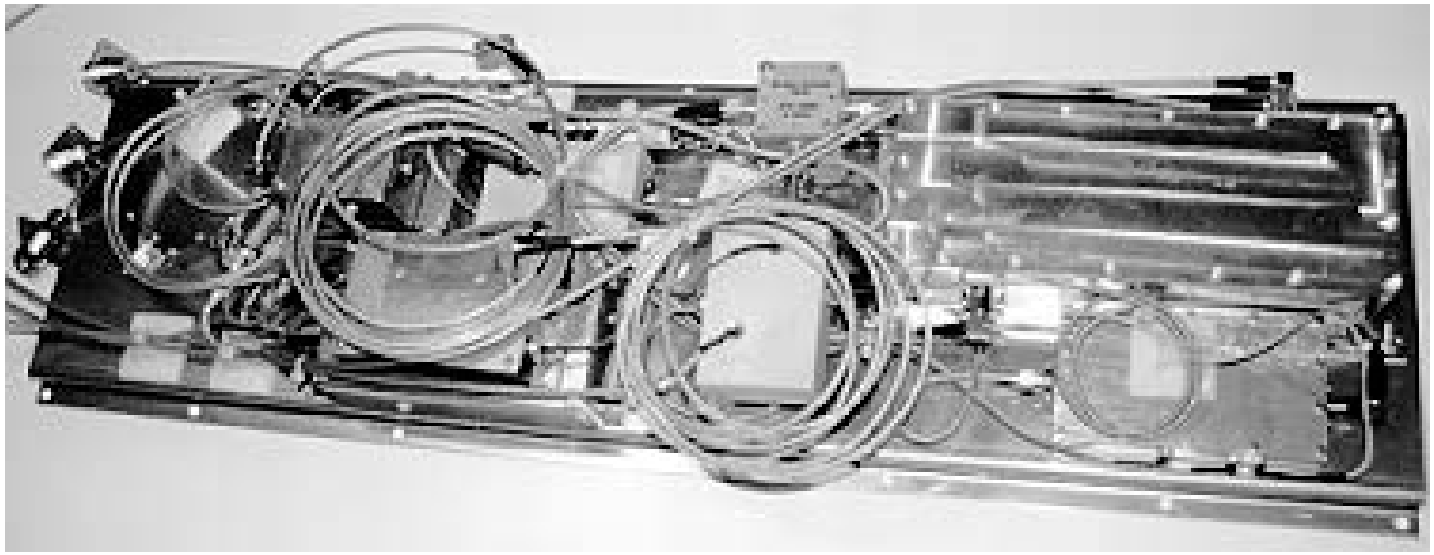

A TUNED PULSE POWER METER HAVING A CENTER FREQUENCY IN THE S-BAND AND A BANDWIDTH OF 150 MHz FOR 10 ns PULSES

MEASURING BELOW –160 dBm

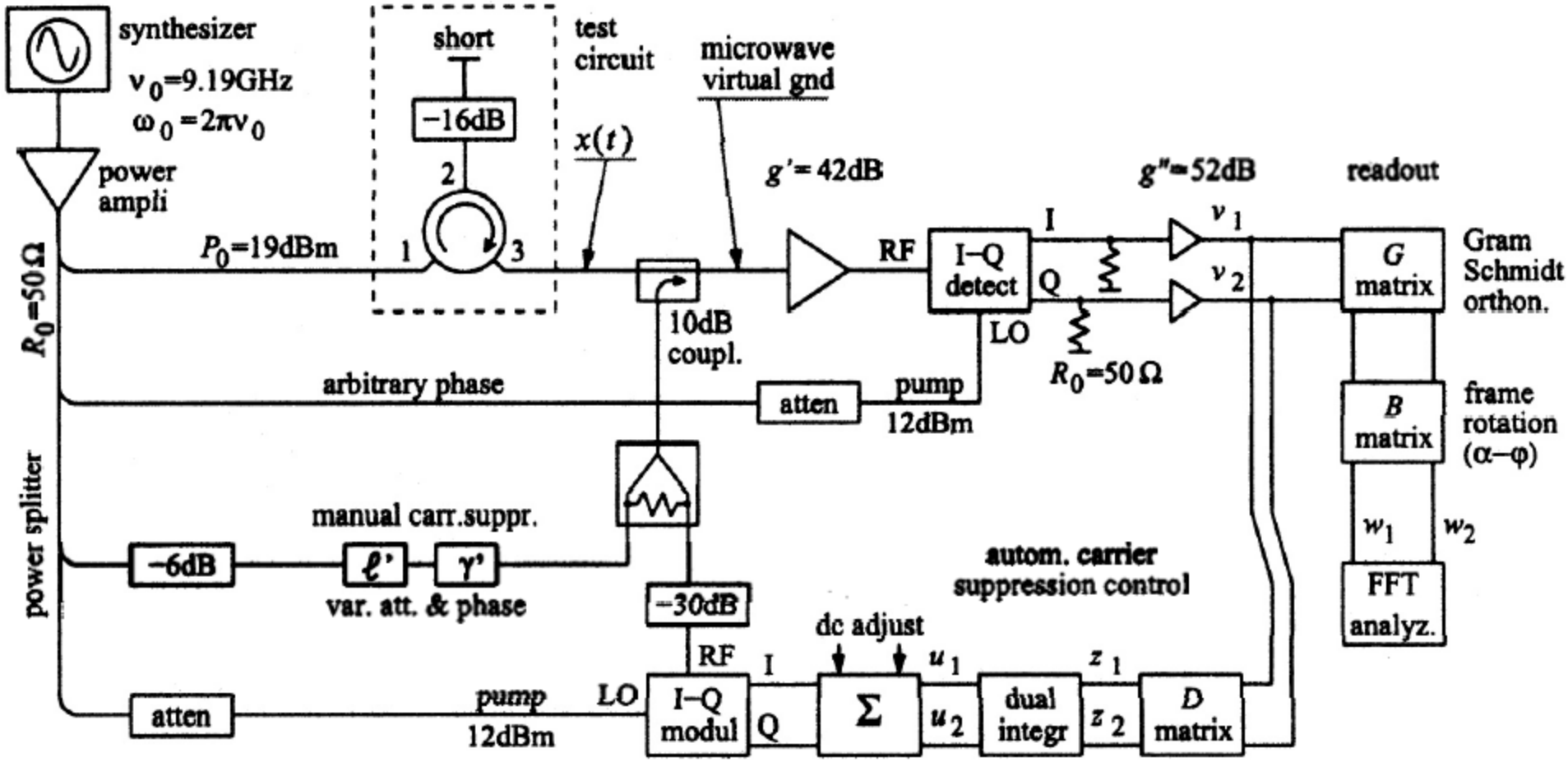

SEE THE THEMATIC ARTICLE LOW_POWER.PDF FOR A DETAILED DISCUSSION OF THIS SETUP

LECTURE FOUR

FREQUENCY AND TIME

- COUNTERS
- PHASE COMPARATORS
- HUGE SPAN OF TIME INTERVALS

ALLAN VARIANCE

$$\sigma_y^2(\tau) = \frac{1}{2(m-1)} \sum_{k=1}^{m-1} (\bar{y}_{k+1} - \bar{y}_k)^2$$

In the example below:
Number of data values available, m=9
Number of differences averaged, m-1=8
Sampling time interval τ=1s

Data Values (y)	First Differences $(\bar{y}_{k+1} - \bar{y}_k)$	First Differences Squared $(\bar{y}_{k+1} - \bar{y}_k)^2$
892		
809	-83	6889
823	14	196
798	-25	625
671	-127	16129
644	-27	729
883	239	57121
903	20	400
677	-226	51076

$$\sum_{k=1}^{m-1} (\bar{y}_{k+1} - \bar{y}_k)^2 = 133165$$

Based on these data:

$$\sigma_y^2(\tau) = \frac{133165}{2(8)} = 8322.81$$

$$[\sigma_y^2(\tau)]^{1/2} = \sqrt{8322.81}$$

$$\sigma_y(\tau) = 91.23, \quad \tau = 1s$$

In this example, the data values are parts in 10^{13}.

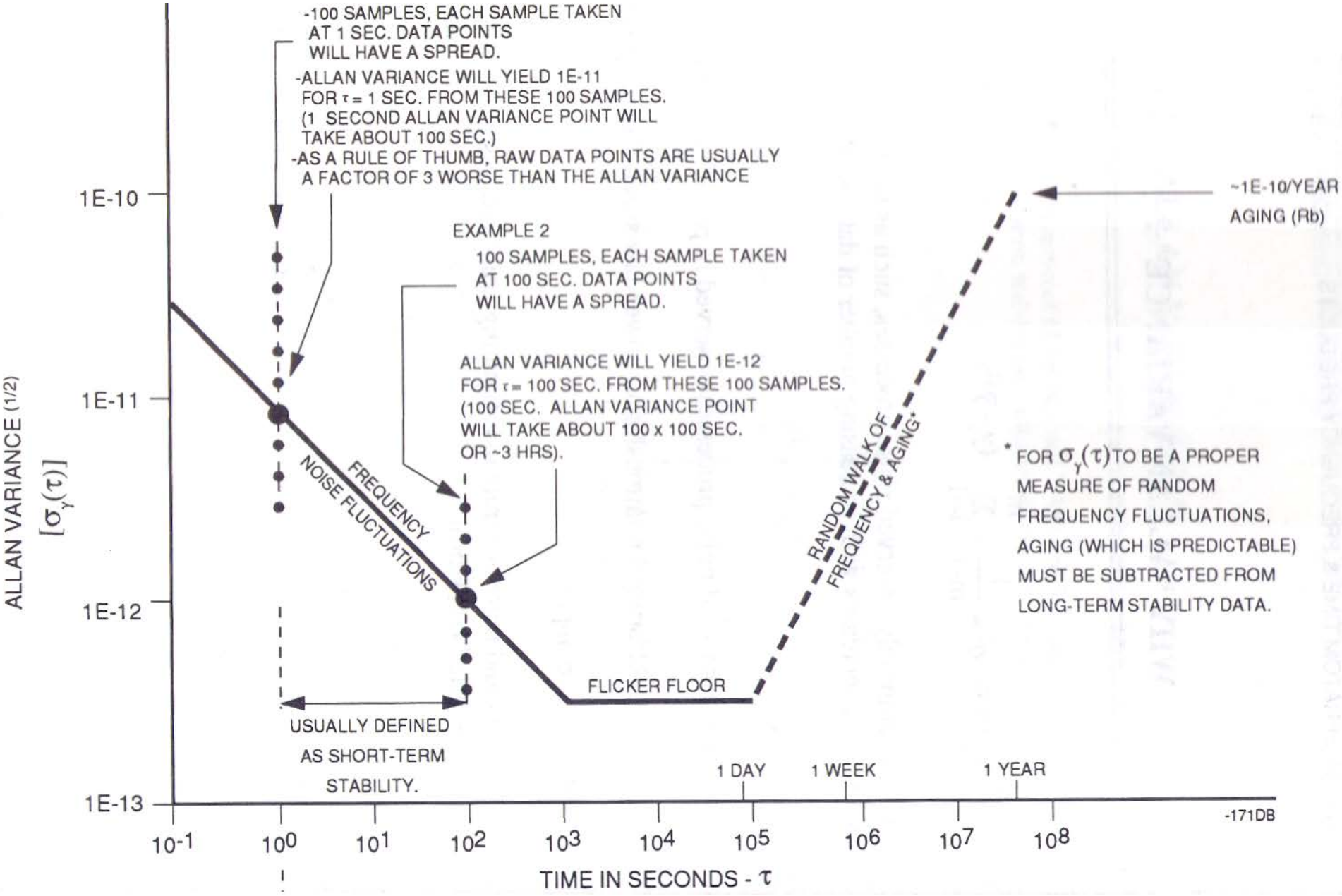
-100 SAMPLES, EACH SAMPLE TAKEN AT 1 SEC. DATA POINTS WILL HAVE A SPREAD.
-ALLAN VARIANCE WILL YIELD 1E-11 FOR τ = 1 SEC. FROM THESE 100 SAMPLES. (1 SECOND ALLAN VARIANCE POINT WILL TAKE ABOUT 100 SEC.)
-AS A RULE OF THUMB, RAW DATA POINTS ARE USUALLY A FACTOR OF 3 WORSE THAN THE ALLAN VARIANCE
EXAMPLE 2
100 SAMPLES, EACH SAMPLE TAKEN AT 100 SEC. DATA POINTS WILL HAVE A SPREAD.
ALLAN VARIANCE WILL YIELD 1E-12 FOR τ = 100 SEC. FROM THESE 100 SAMPLES. (100 SEC. ALLAN VARIANCE POINT WILL TAKE ABOUT 100 x 100 SEC. OR ~3 HRS).
~1E-10/YEAR AGING (Rb)
* FOR $\sigma_y(\tau)$ TO BE A PROPER MEASURE OF RANDOM FREQUENCY FLUCTUATIONS, AGING (WHICH IS PREDICTABLE) MUST BE SUBTRACTED FROM LONG-TERM STABILITY DATA.
FREQUENCY NOISE FLUCTUATIONS
RANDOM WALK OF FREQUENCY & AGING*
FLICKER FLOOR
USUALLY DEFINED AS SHORT-TERM STABILITY.
1 DAY
1 WEEK
1 YEAR
-171DB
ALLAN VARIANCE (1/2) $[\sigma_y(\tau)]$
1E-10
1E-11
1E-12
1E-13
10^{-1} 10^{0} 10^{1} 10^{2} 10^{3} 10^{4} 10^{5} 10^{6} 10^{7} 10^{8}
TIME IN SECONDS - τ

FREQUENCY OFFSET AND DRIFT

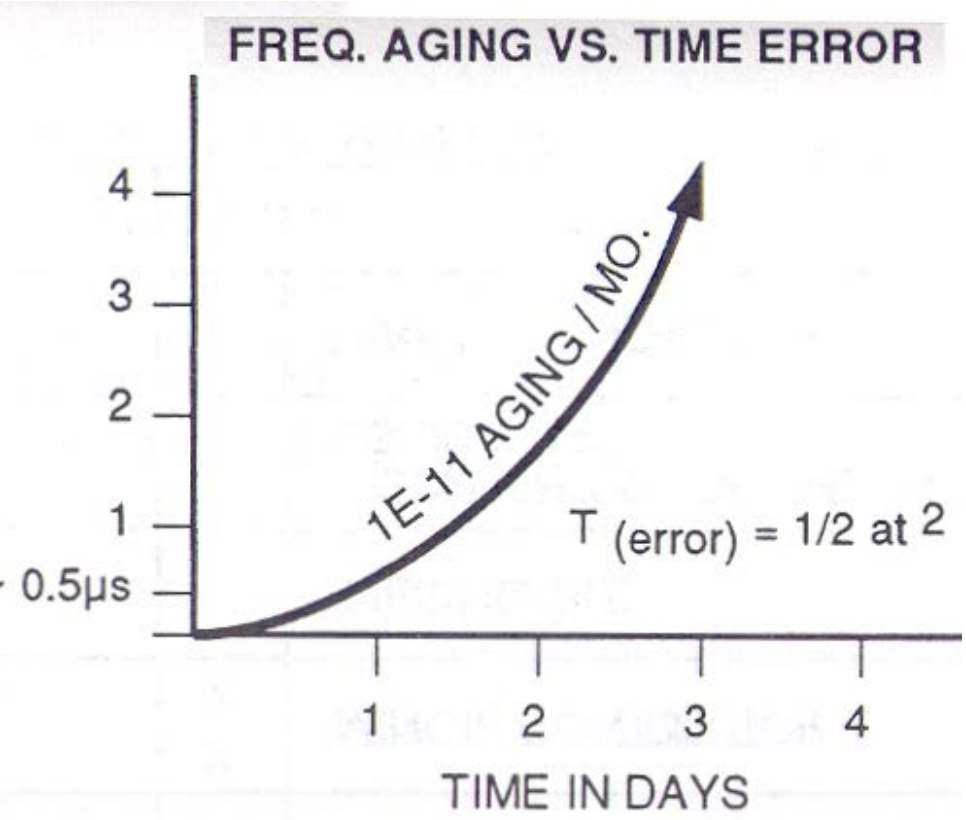

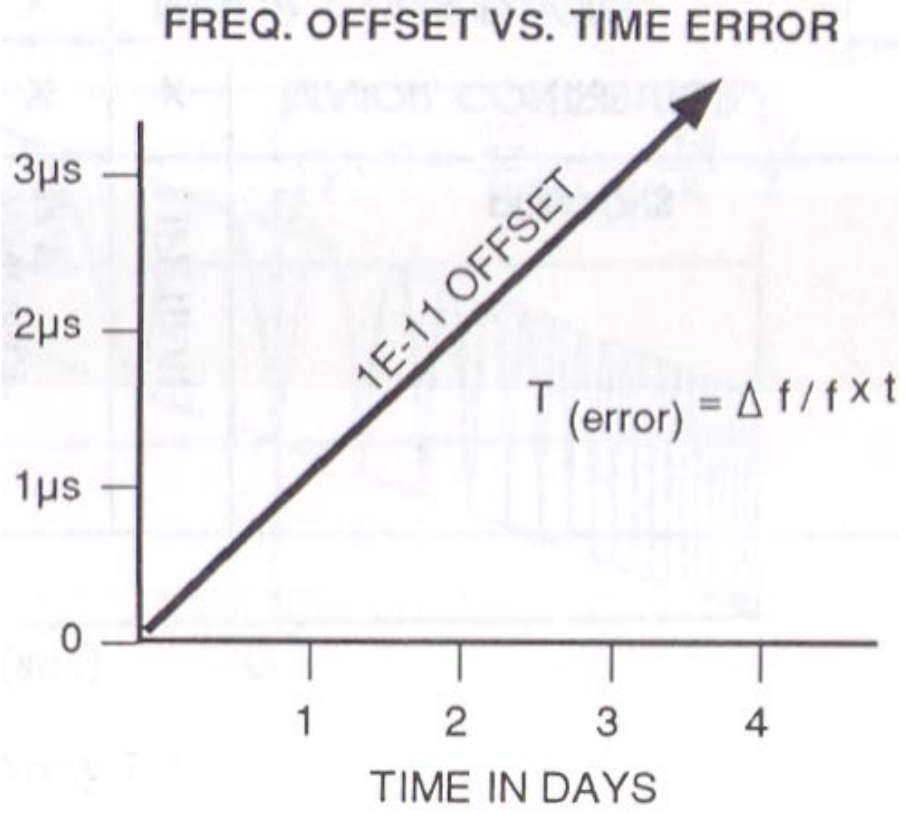

USING A DOUBLE BALANCED MIXER (DBM) AS A PHASE DETECTOR

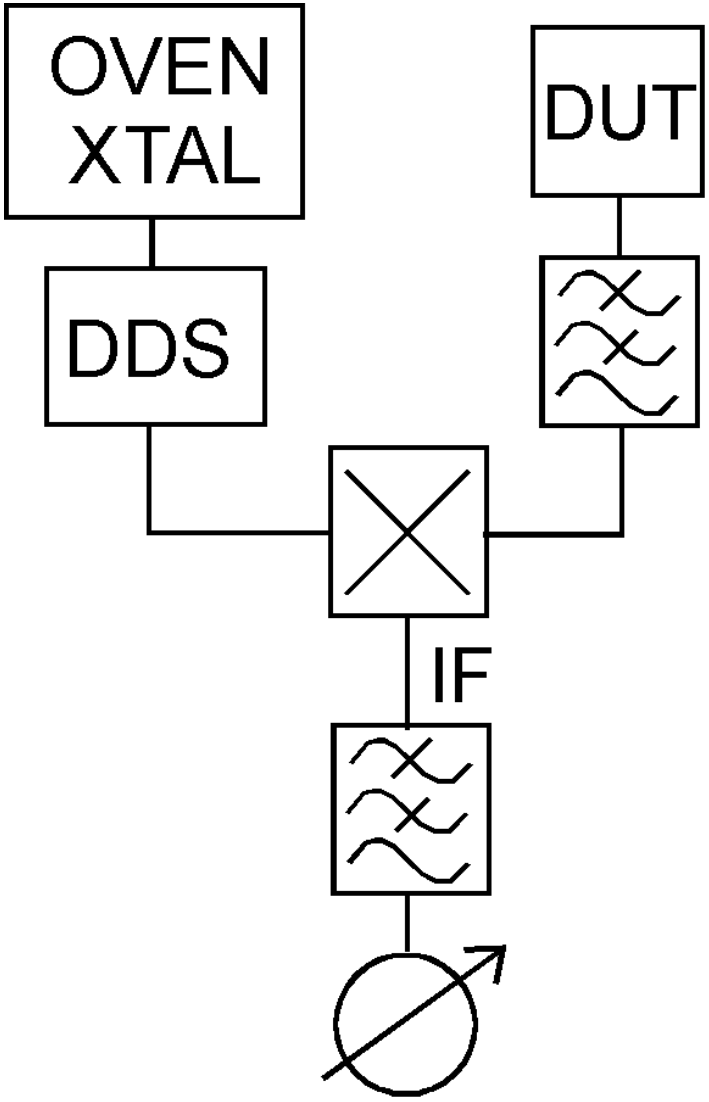

EXAMPLE OF SUCH PHASE COMPARATOR RECORDING

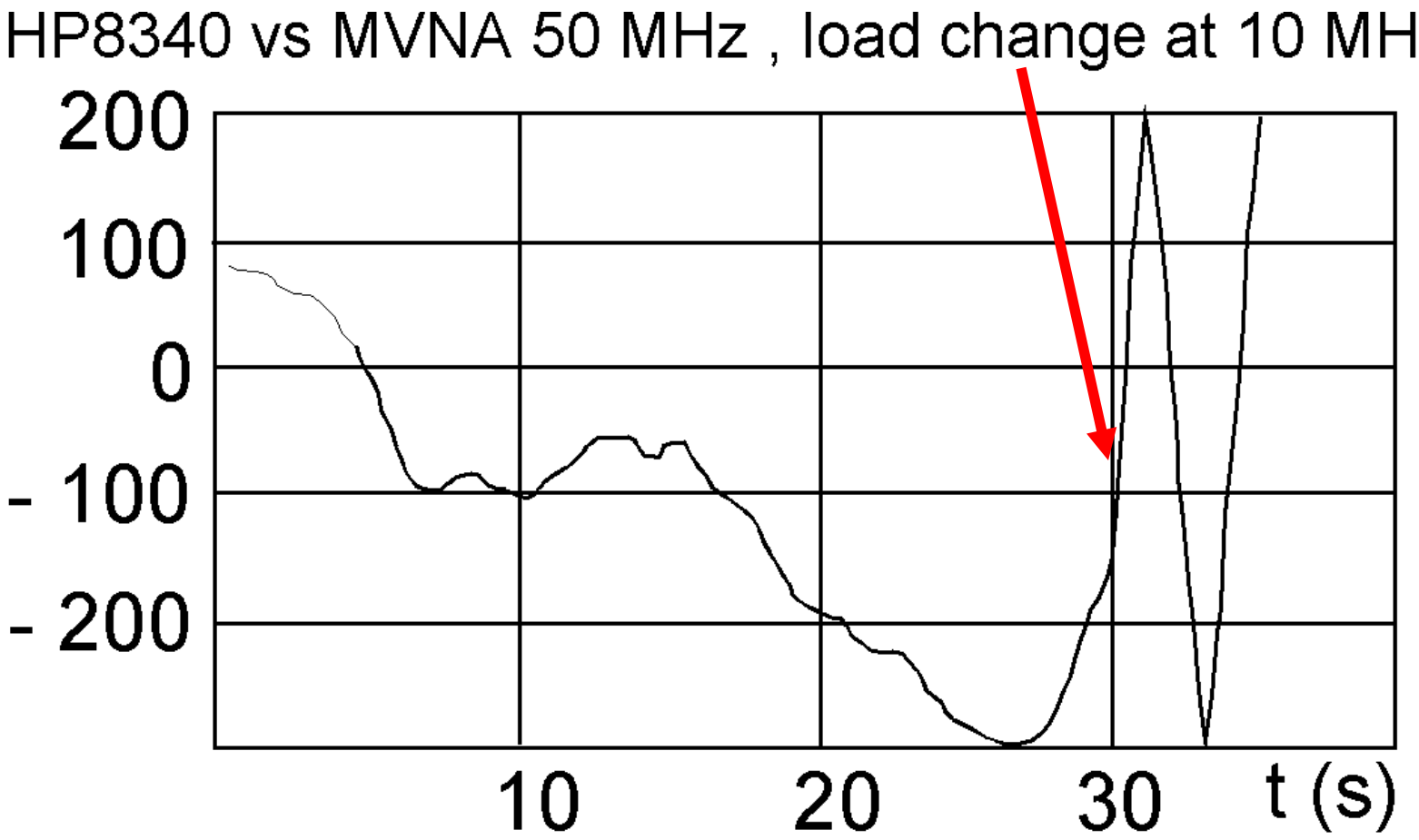

FREQUENCY COUNTERS

- NEW COUNTERS USE TRICKS TO OVERCOME THE GATE TIME LIMITATION IN RESOLUTION - BEWARE OF POSSIBLE ANOMALIES
- TRIGGER ERRORS CAUSED BY NOISE, INTERFERENCE AND TOO LONG RISETIMES HAMPER ACCURACY
- STATISTICAL FEATURES GIVE SOME RELIEF BUT WILL NOT HELP IF MOMENTARY VALUES ARE NEEDED
- TYPICAL OFF-THE-SHELF UNITS HAVE THE CHEAPEST TIME BASES EVER MADE

TIME INTERVAL COUNTERS

Time Interval Counter:

- Highest resolution in pulse to pulse measurements.
- Easy Automation—IEEE 488 Interfacing.
- Statistics.
- Noise effects negligible on fast rise time pulses.
- Single shot capability.
- Different trigger voltages on stop and start channels.
- Measurements above 100MHz.

Oscilloscope:

- Excellent visual feedback
- Noisy complex waveforms may be visually filtered.
- Excellent for slow rise time measurements on noisy signals.
- Less prone to false triggering due to noise.

BASIC TI ERRORS

Total counter error in a time interval measurement is made up of several parts all added together in a way to get the largest number thus defining maximum measurement error. These are:

- ±1 count
- ± trigger error (including trigger settability)
- ± time base error
- ± systematic error (when measuring short intervals)

THE ENERGY EFFECT

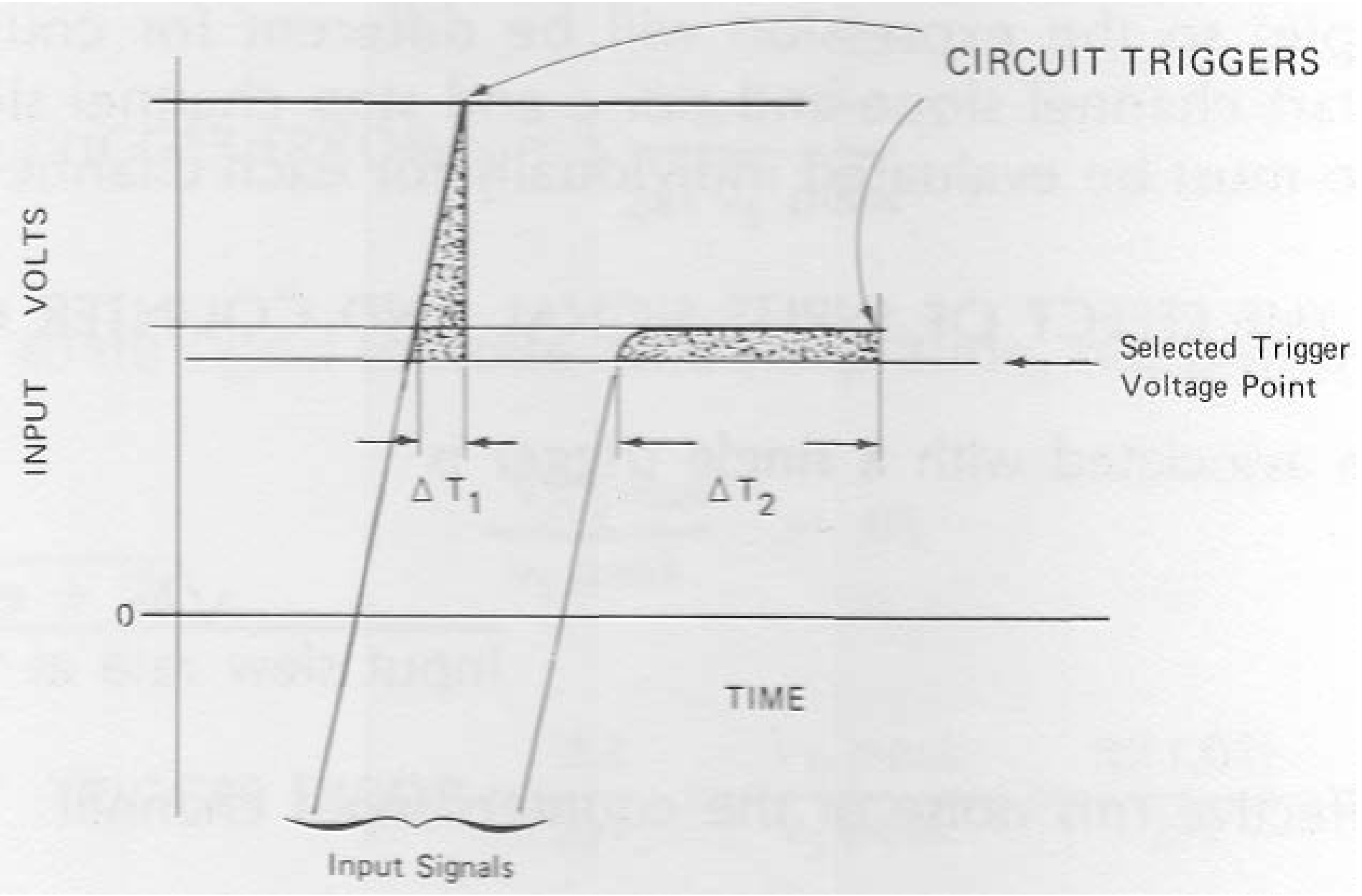

COUNTER TIME BASES

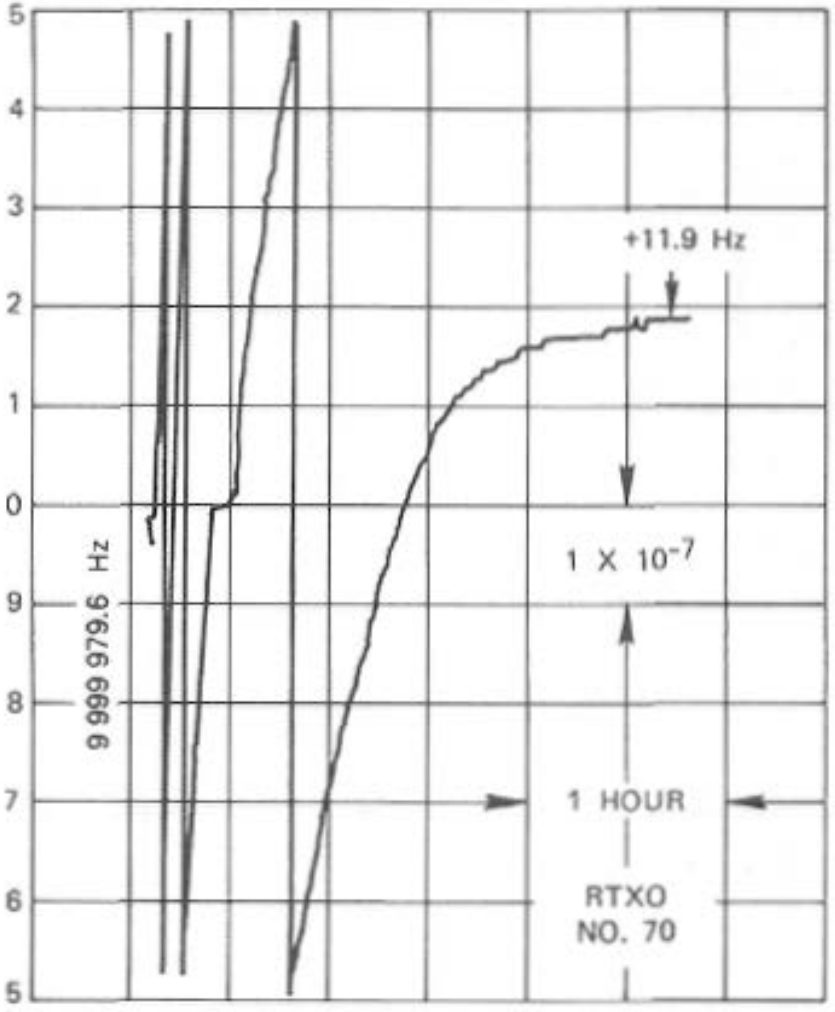

RTXO

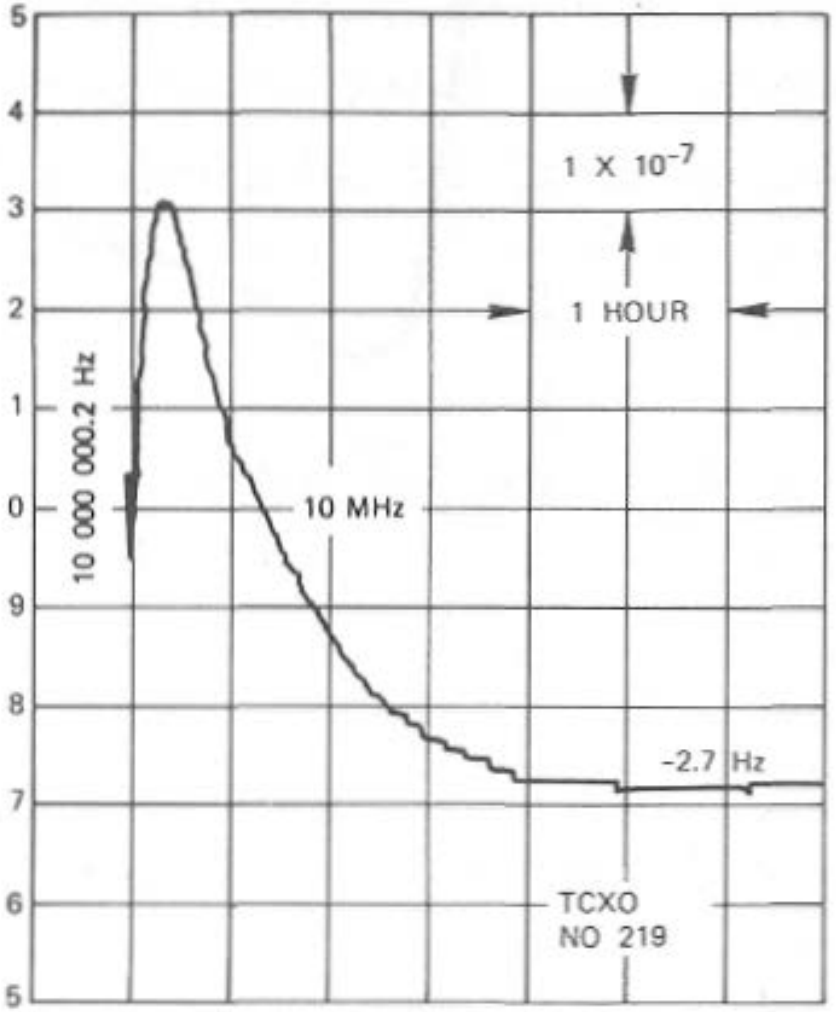

TCXO

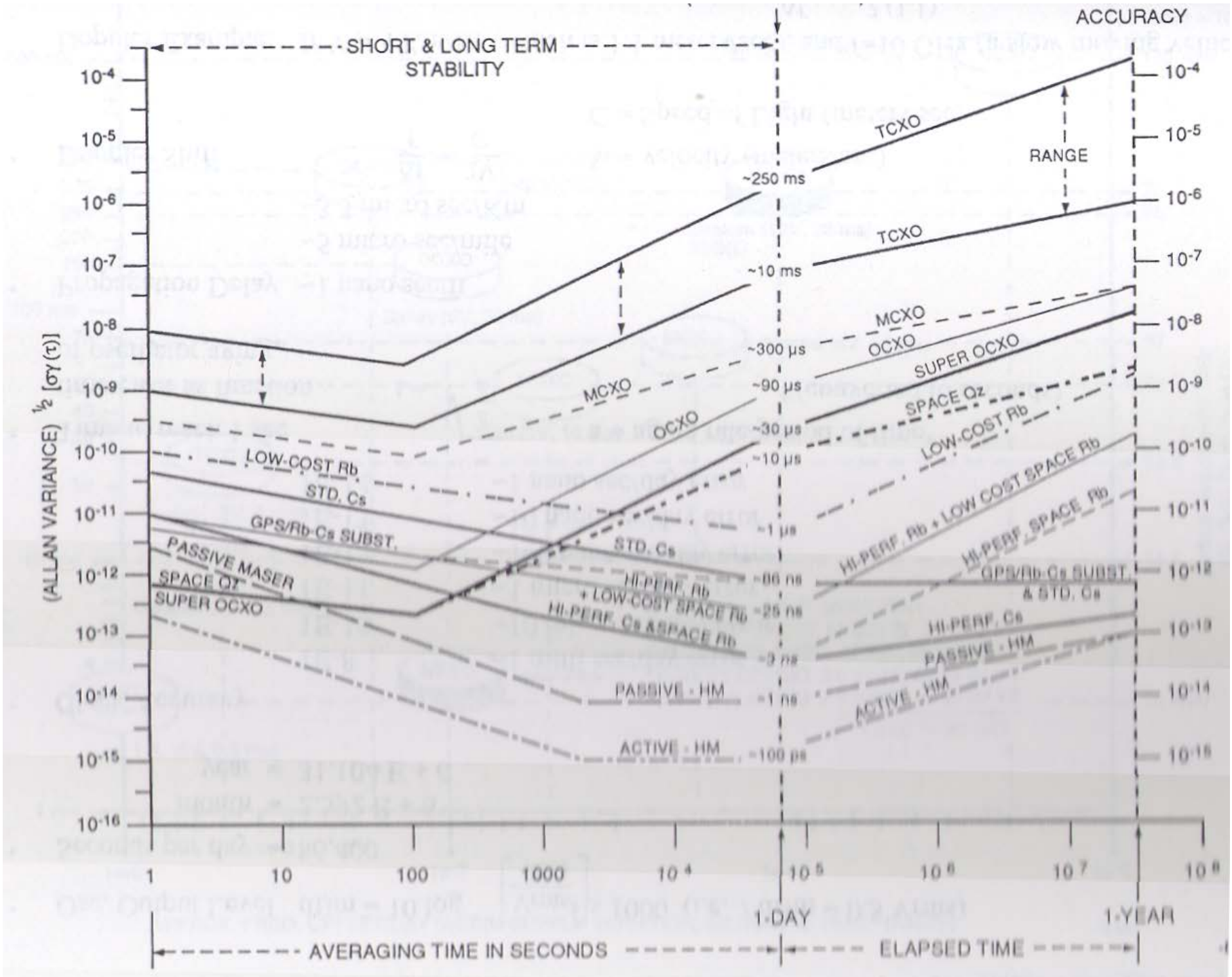
ACCURACY
SHORT & LONG TERM STABILITY
RANGE
TCXO
TCXO
MCXO
OCXO
SUPER OCXO
SPACE Qz
LOW-COST Rb
HI-PERF. Rb + LOW COST SPACE Rb
HI-PERF. SPACE Rb
GPS/Rb-Cs SUBST. & STD. Cs
HI-PERF. Cs
PASSIVE - HM
ACTIVE - HM
~250 ms
~10 ms
~300 µs
~90 µs
~30 µs
~10 µs
~1 µs
~86 ns
~25 ns
~3 ns
~1 ns
~100 ps
MCXO
OCXO
LOW-COST Rb
STD. Cs
GPS/Rb-Cs SUBST.
PASSIVE MASER
SPACE Qz
SUPER OCXO
STD. Cs
HI-PERF. Rb + LOW-COST SPACE Rb
HI-PERF. Cs & SPACE Rb
PASSIVE - HM
ACTIVE - HM
(ALLAN VARIANCE) ½ [σy(τ)]
10-4
10-5
10-6
10-7
10-8
10-9
10-10
10-11
10-12
10-13
10-14
10-15
10-16
1
10
100
1000
10 4
10 5
10 6
10 7
10 8
1-DAY
1-YEAR
AVERAGING TIME IN SECONDS
ELAPSED TIME

AN OVEN TIME BASE

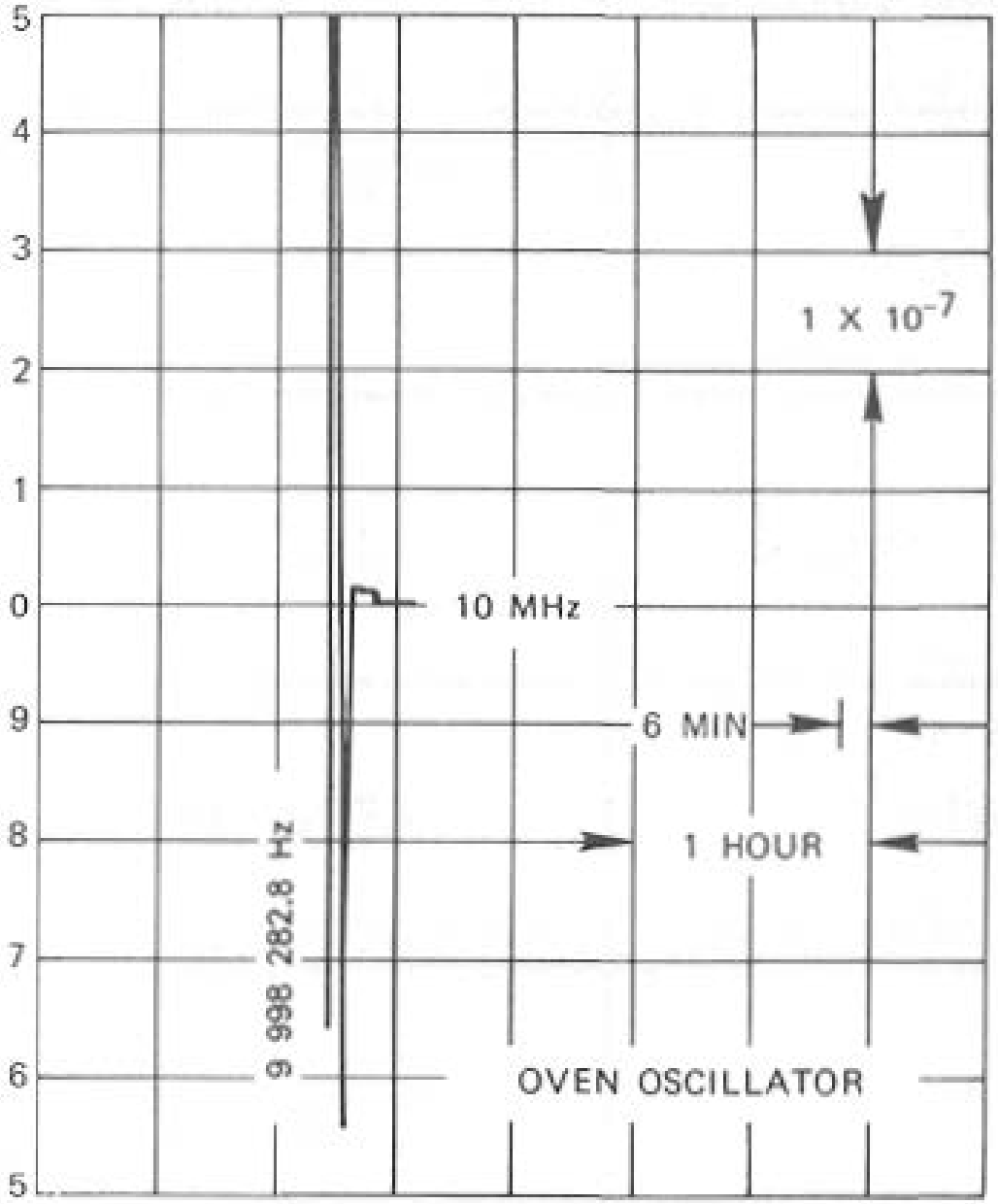

TIME DOMAIN VIEW AND...

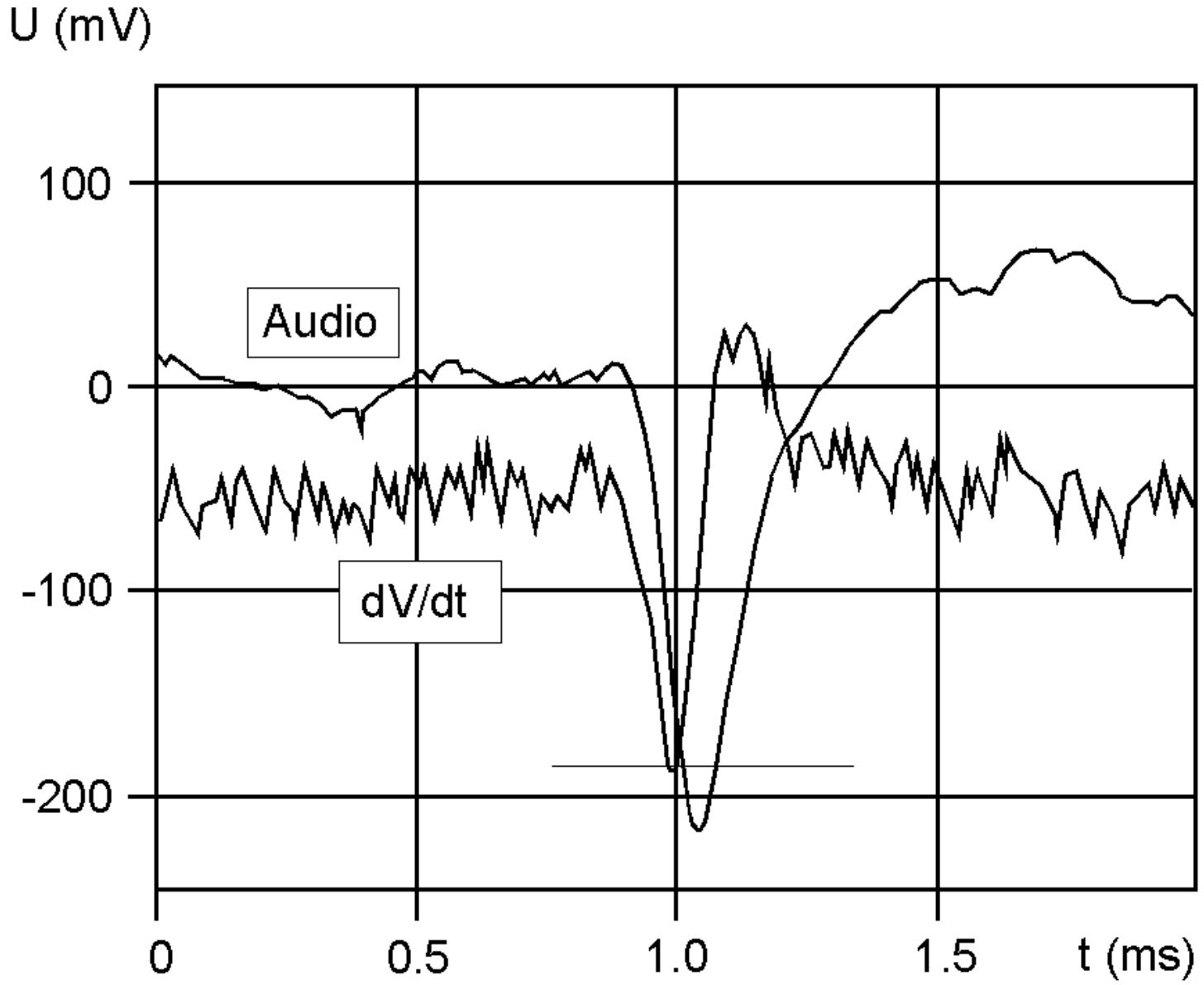

TIMING PULSES OBTAINED THROUGH A RADIO LINK

... THE MEASURED TIMING HISTOGRAM

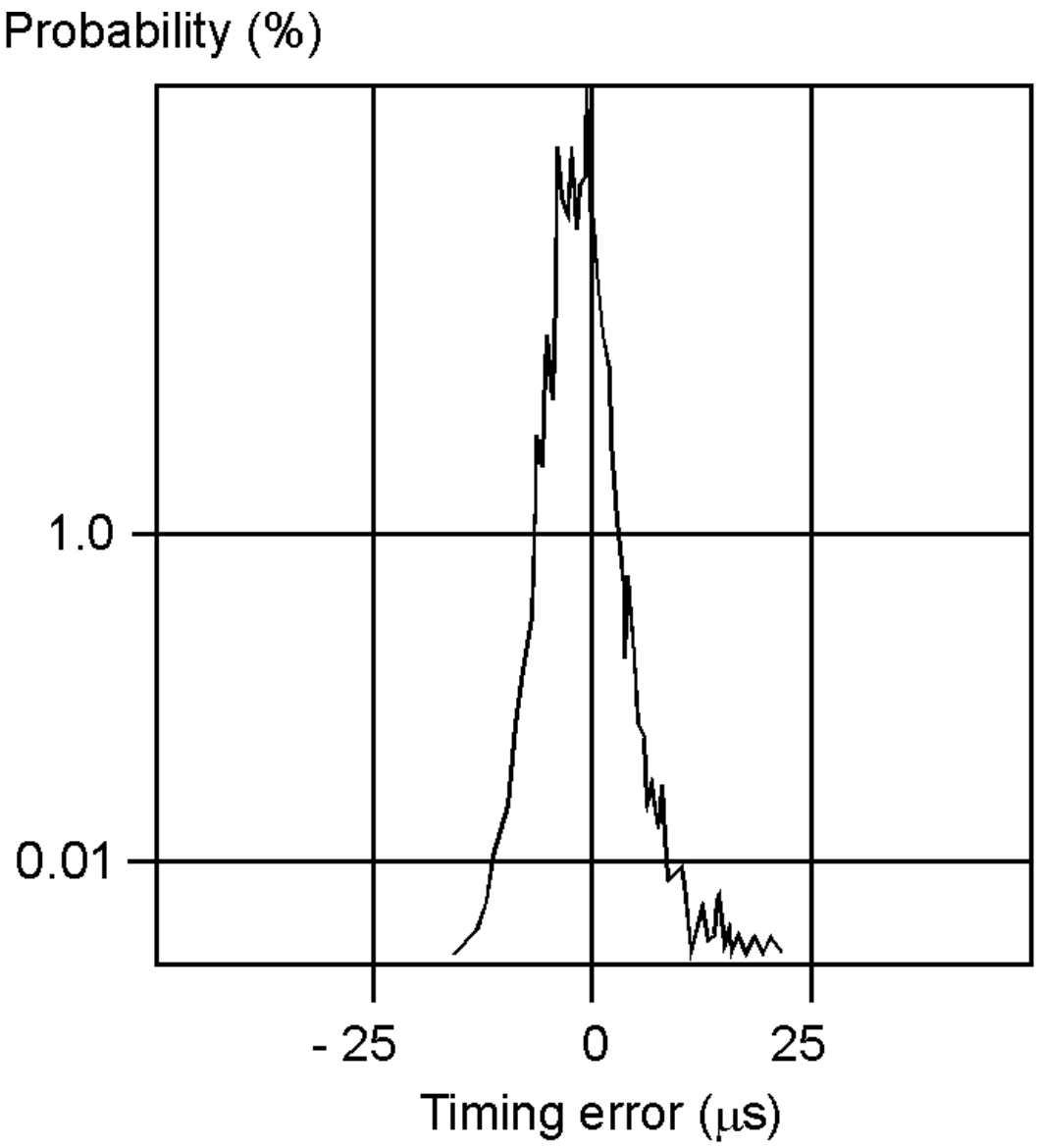

LONG-TERM TIME DOMAIN RECORDING OF A GPS CLOCK

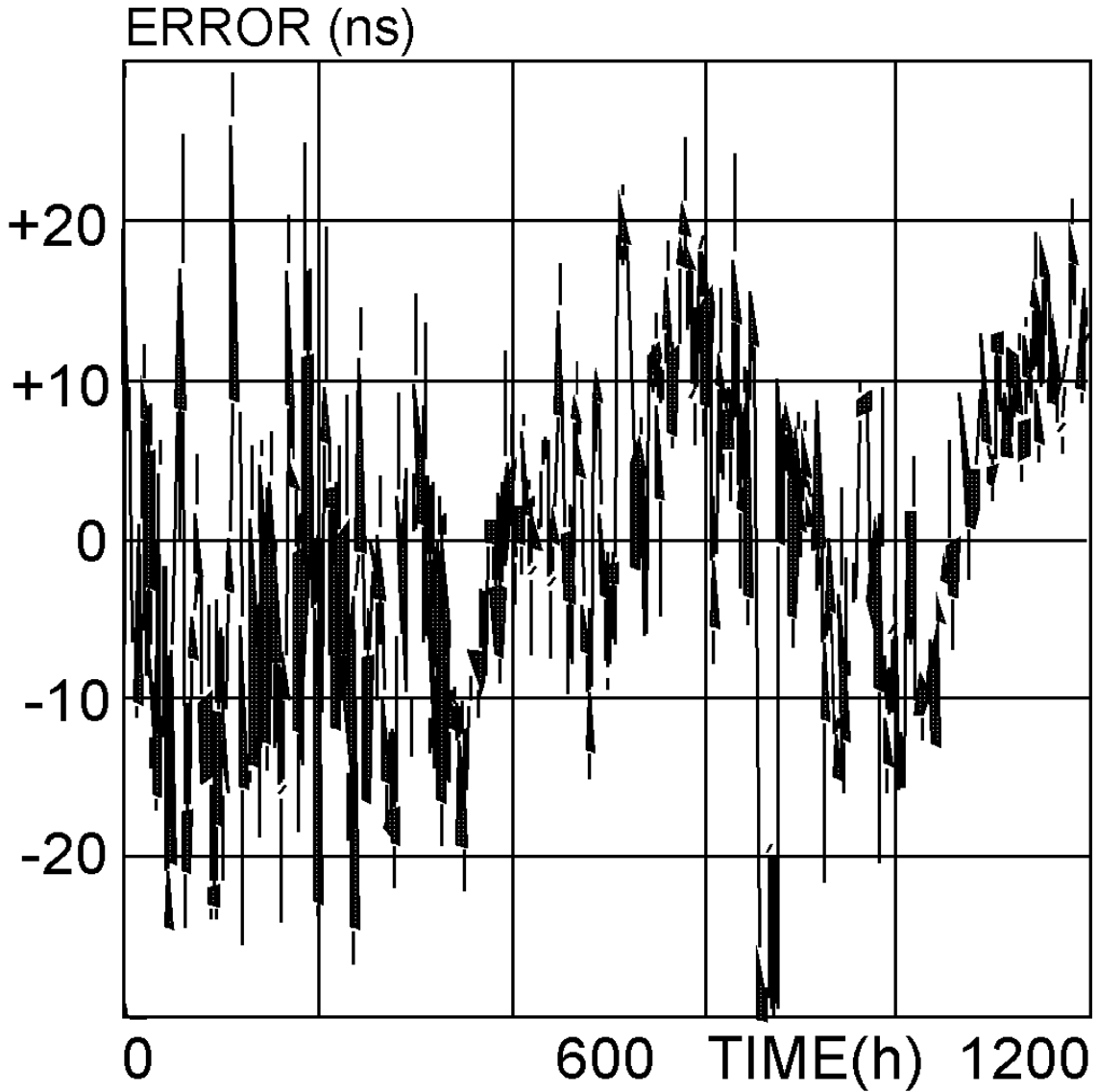

AND THE SAME DATA AS HISTOGRAM

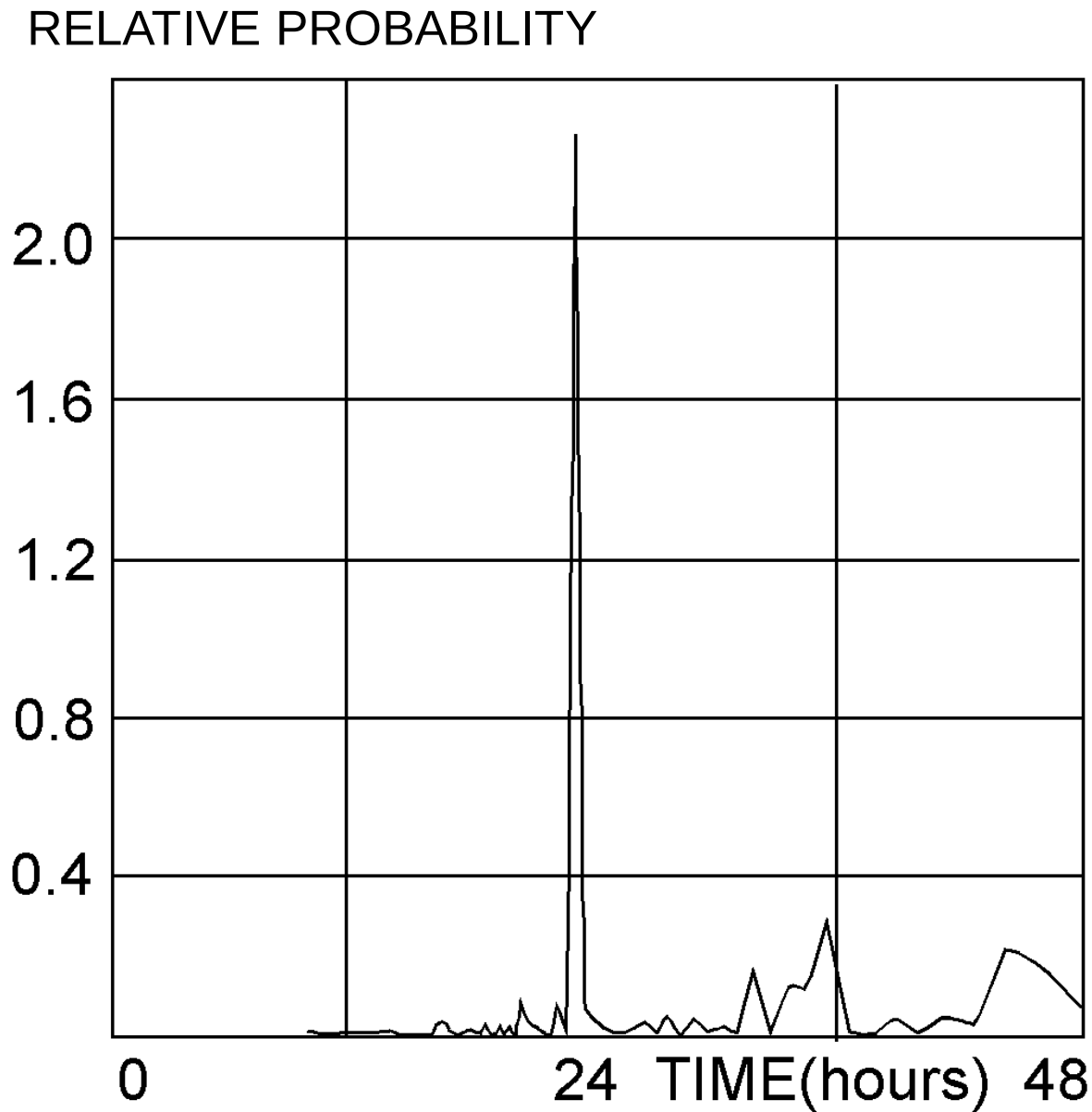

COMMERCIAL COUNTER

HP 53131A and 53132A Universal Counters

SPECIFICATIONS

	HP 53131A	HP 53132A
Measurements	Frequency, frequency ratio, time interval, period, rise/fall time, positive/negative pulse width, duty cycle, phase (CH 1 to CH 2), totalize, peak voltage, time interval average, time interval delay	
Analysis	Automatic limit testing, math (scale and offset), statistics (minimum, maximum, m Statistics available on all measurements or only measurements that fall within lir	
Measurement characteristic		
Frequency range	CH 1 & 2: dc–225 MHz	CH 1 & 2: dc–225 MHz
Frequency resolution:	10 digits/s	12 digits/s
Time interval resolution (LSD)	500 ps	150 ps
Measurement speed:	Up to 200 meas/s over GPIB	Up to 200 meas/s over GPIB
Voltage range & Sensitivity (Sinusoid)		
DC to 100 MHz:	20 mVrms to ±5 Vac + dc	20 mVrms to ±5 Vac + dc
100 MHz to 200 MHz:	30 mVrms to ±5 Vac + dc	30 mVrms to ±5 Vac + dc
200 to 225 MHz:	40 mVrms to ±5 Vac + dc	40 mVrms to ±5 Vac + dc
Input conditioning	(Independently selectable on CH 1 & 2)	(Independently selectable on CH
Impedance, coupling	1 MΩ or 50 Ω, ac or dc	1 MΩ or 50 Ω, ac or dc
Low pass filter	100 kHz, switchable	100 kHz, switchable
Attenuation	x1 or x10	x1 or x10
External timebase reference input	1, 5, 10 MHz	10 MHz

MORE SPECIFICATIONS

Standard and Optional High-Stability Timebases

		Standard (0° to 50° C)	Ultra High Stability Oven (Option 012, 53132A only)
Temperature Stability: (referenced to 25° C)		< 5×10^{-6}	< 2.5×10^{-9}
Aging Rate (after 30 days)	**Per Day:**	< 3×10^{-7}	< 1×10^{-10}
	Per Month:		< 3×10^{-9}
	Per Year:		< 2×10^{-8}
Turn-on stability vs. time: (in 30 minutes)			< 5×10^{-9} (referenced to 24 hours)
Calibration:		Manual Adjust	Electronic

Note that power to the time base is maintained when the counter is placede under this condition to maintain long-term instrument reliability.

FREQYENCY PROFILES

A SETUP FOR RECORDING OSCILLATOR FREQUENCY VARIATIONS AS A FUNCTION OF EXTERNAL SHOCKS

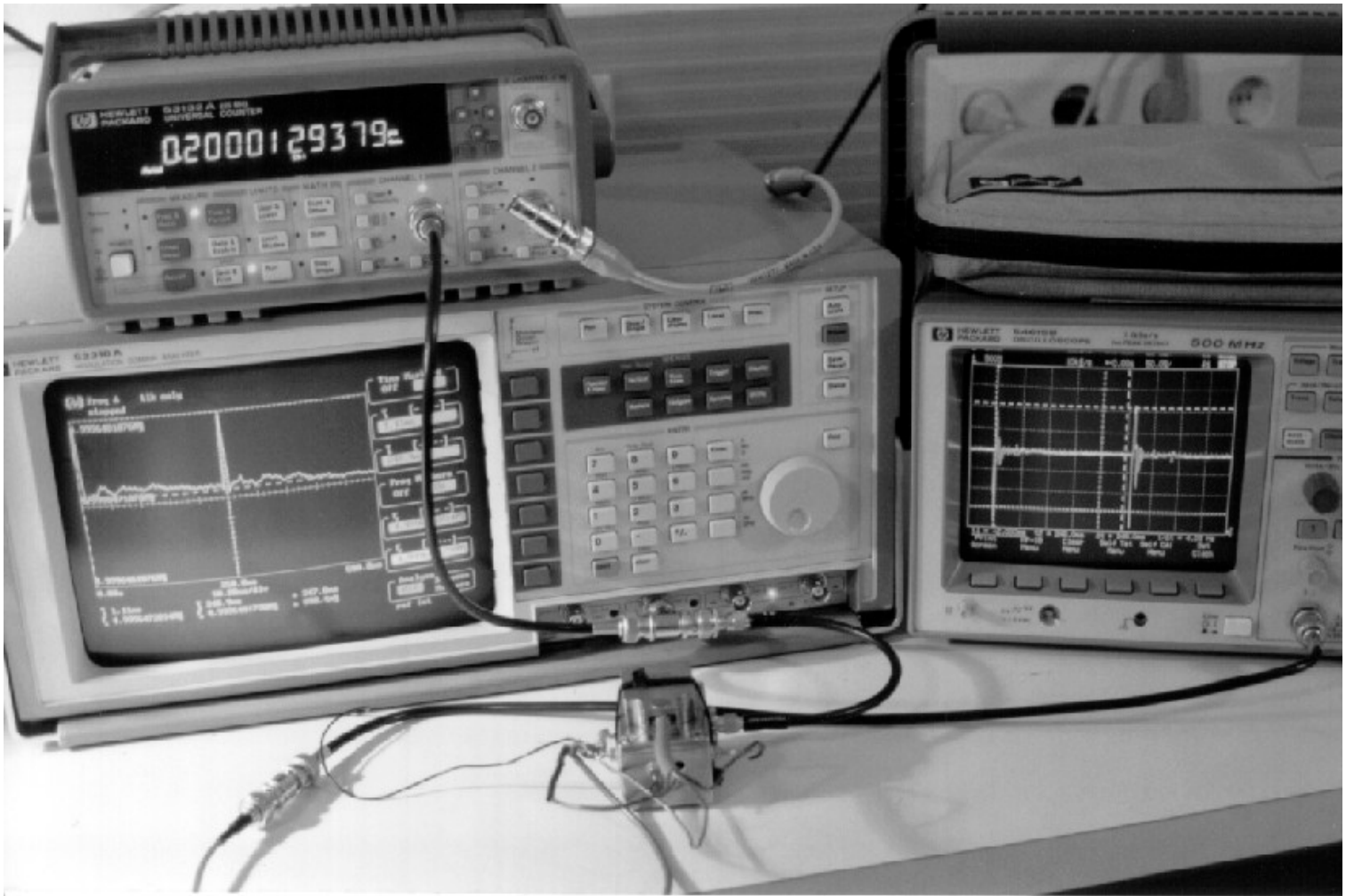

FREQUENCY VS TIME

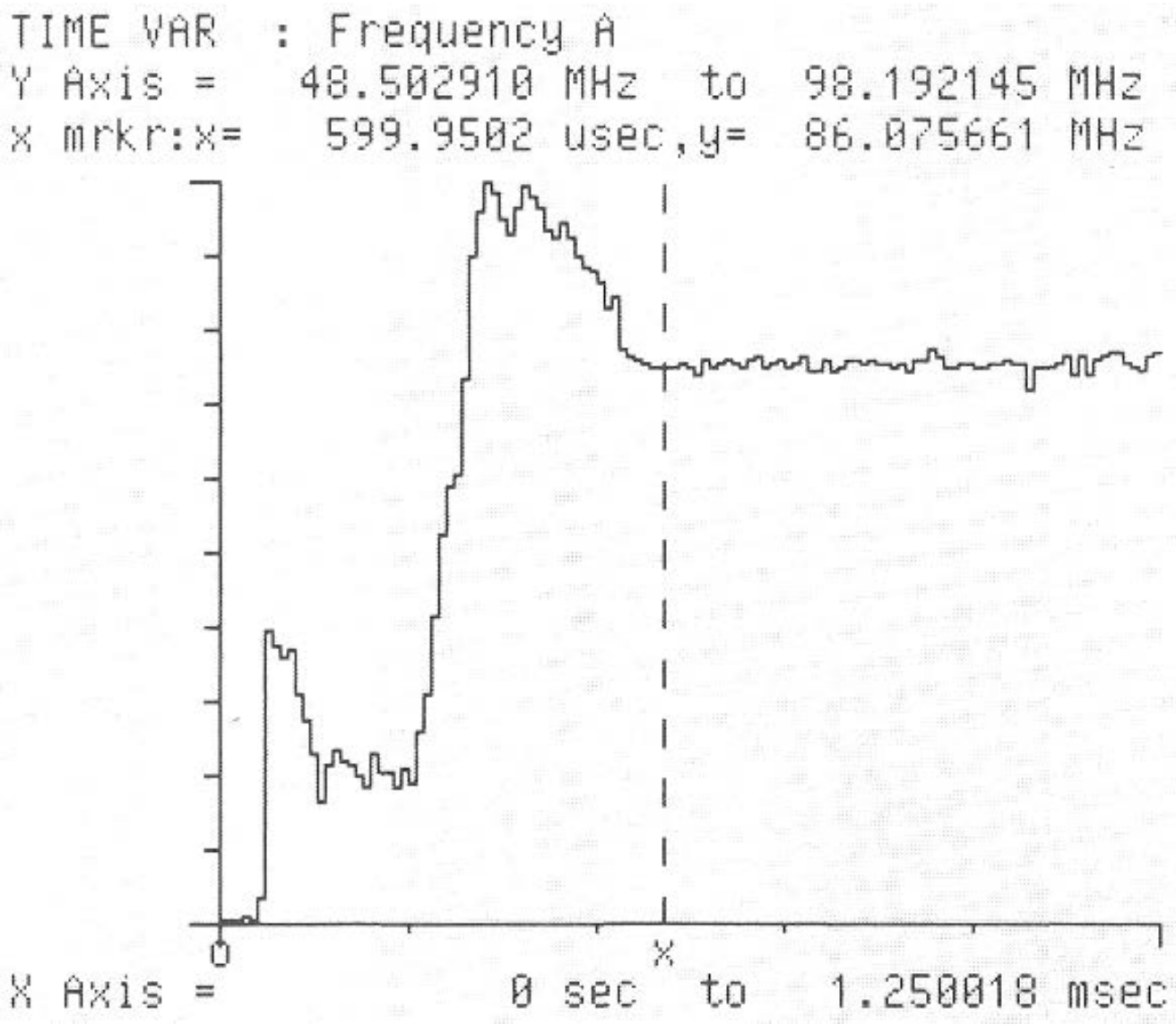

A FREQUENCY HISTOGRAM

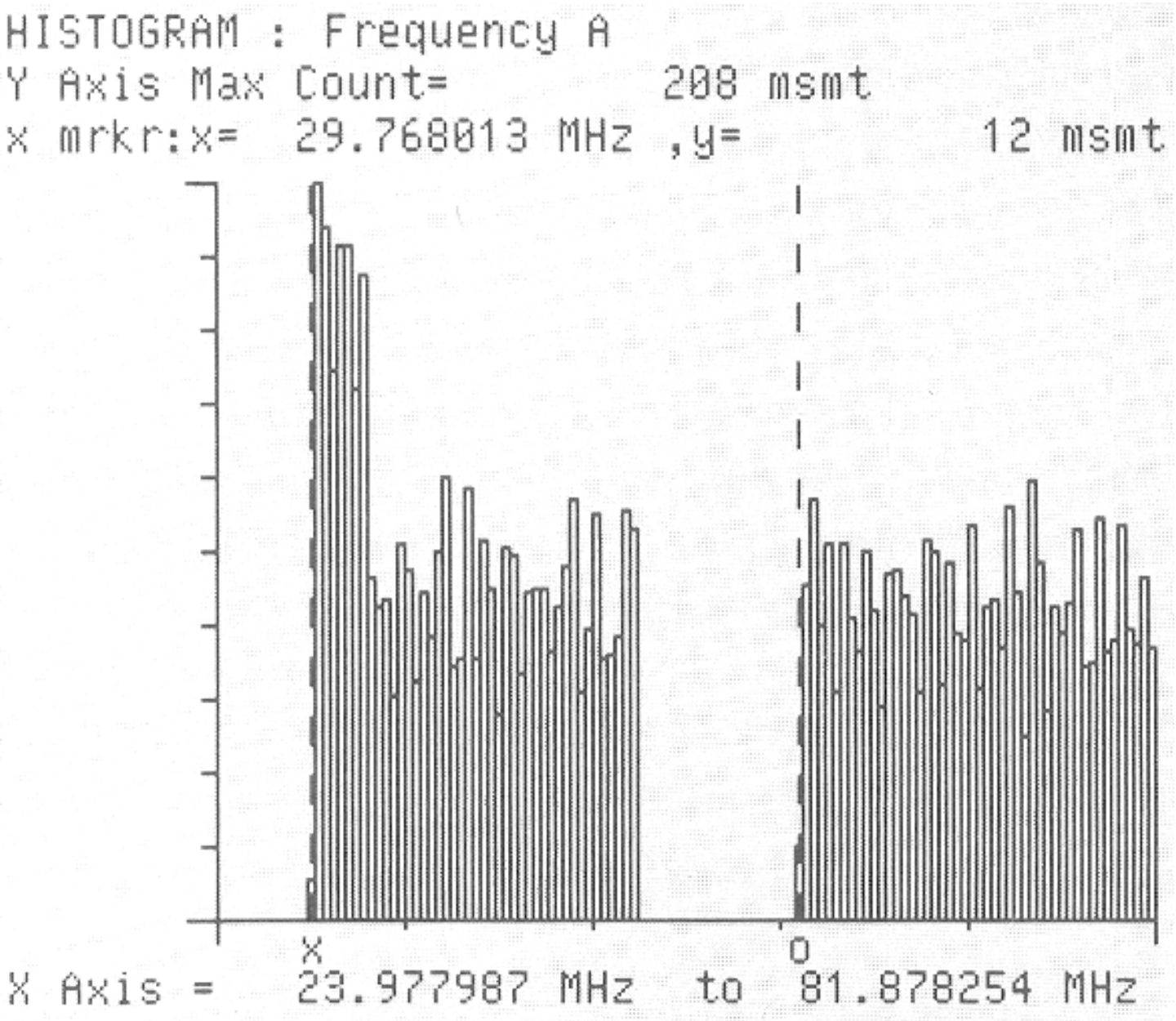

HIGH CLOCK RATES FOR BETTER TIMING RESOLUTION

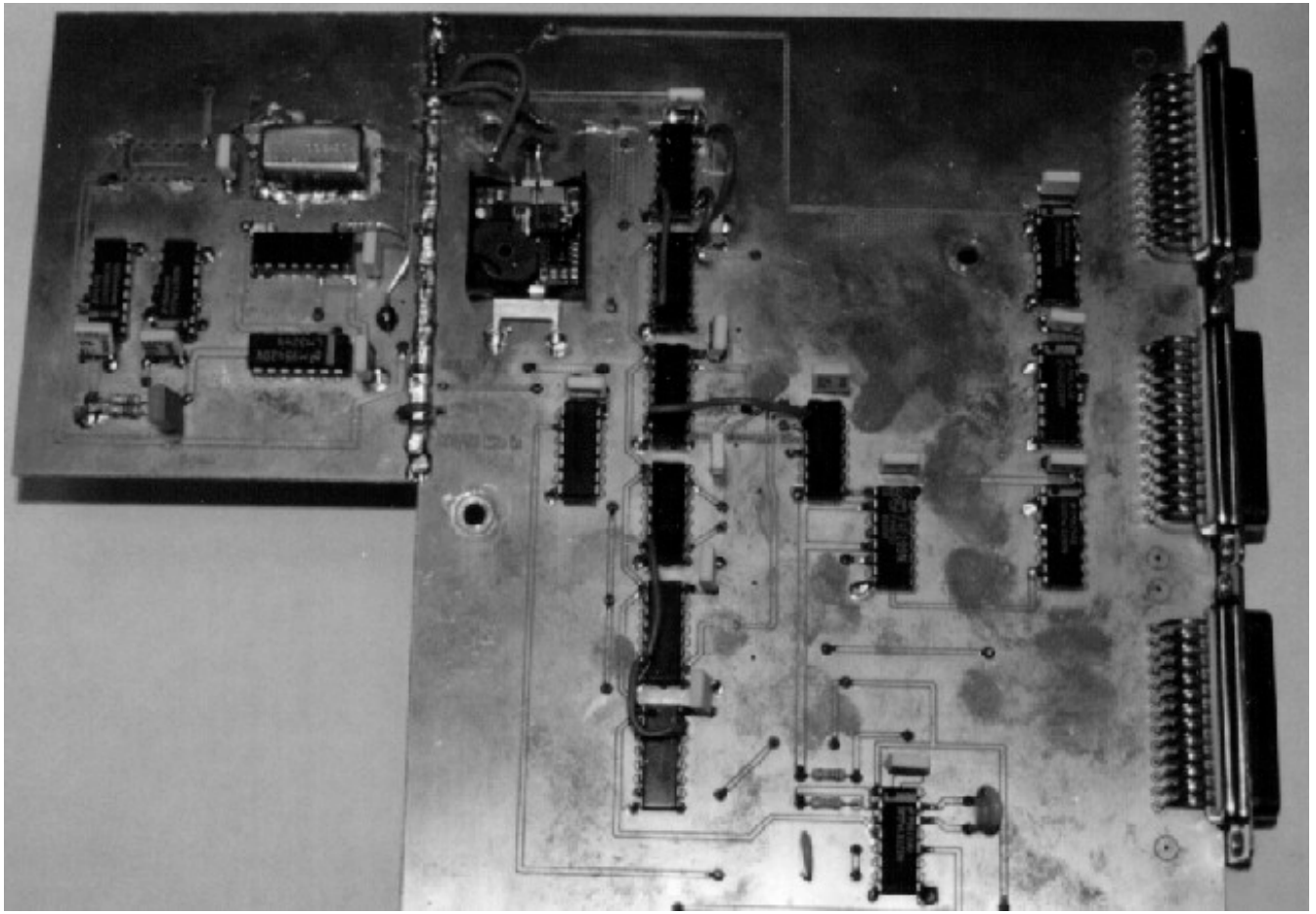

COMPUTER CONTROLLED BOARD GIVING SETTABLE TIME BASE RATES UP TO 10 ns SINGLE SHOT RESOLUTION

NARROW CALIBRATION PULSES

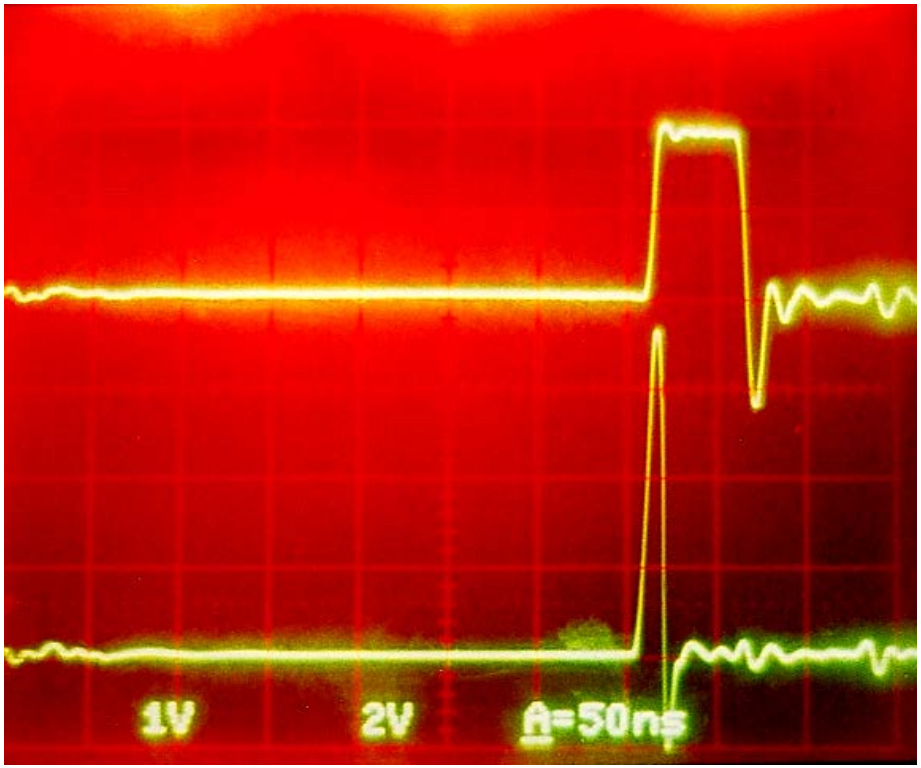

TYPICAL OUTPUT OF 10 ns AT VIDEO INTERFACE

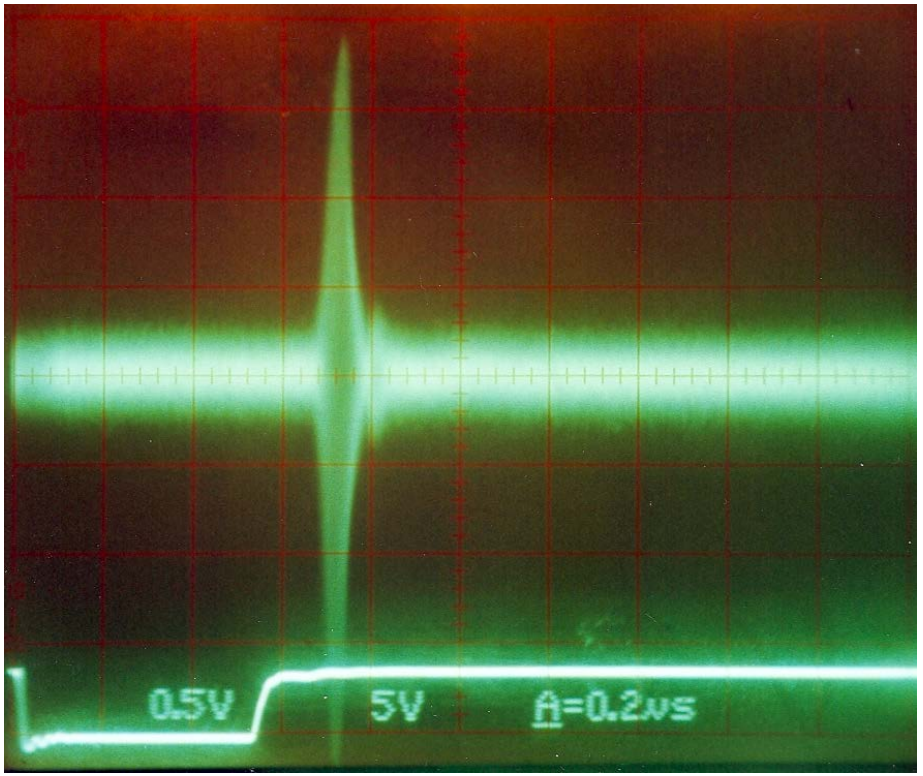

SAME PULSE MODULATED IN RF

DIFFERENCE METHOD

IF WE DON'T NEED THE ABSOLUTE FREQUENCY
BUT JUST WANT TO SEE THE FLUCTUATIONS

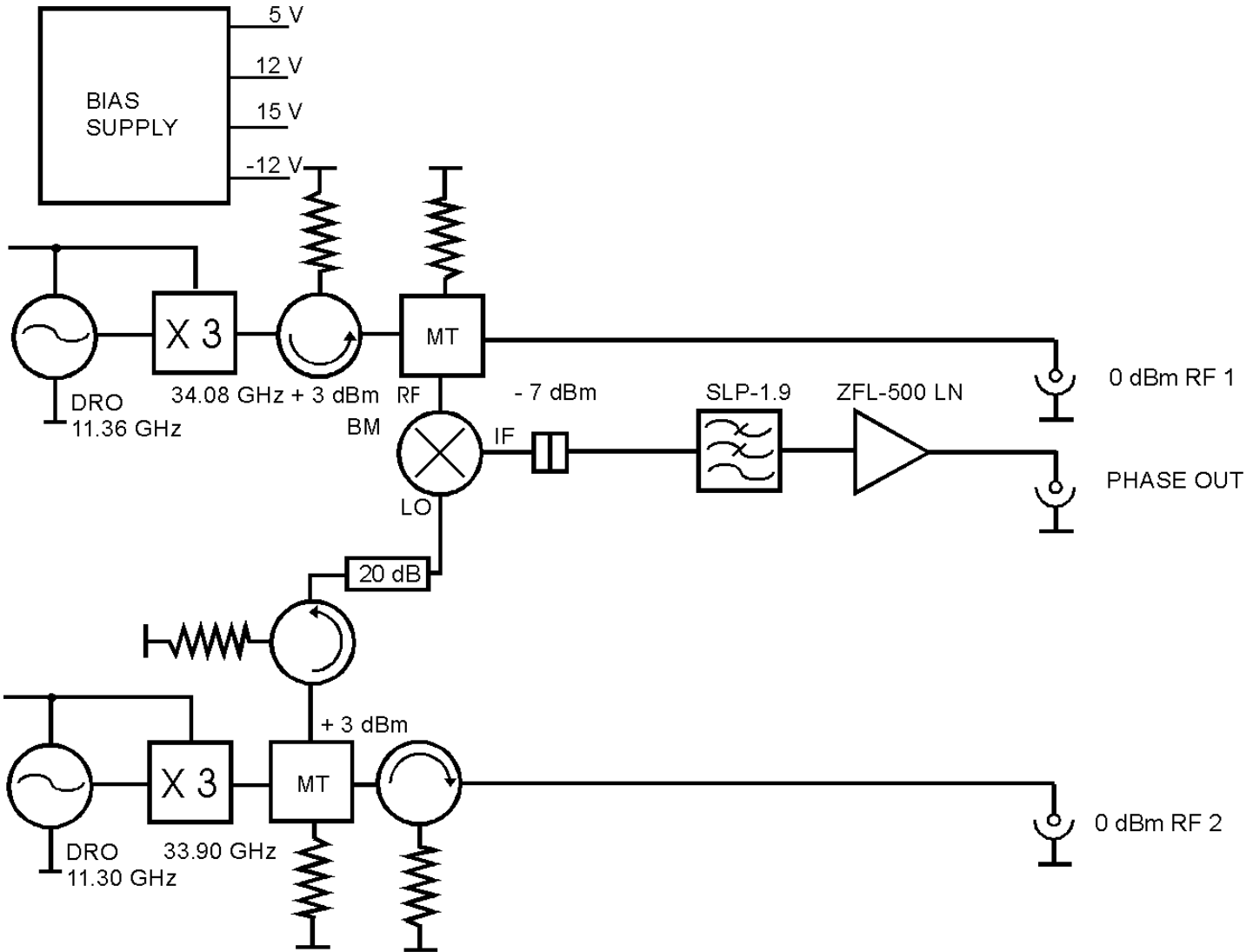

USING A CONTROL VOLTAGE TO TUNE ONE OF THE OSCILLATORS IN THE PREVIOUS SLIDE

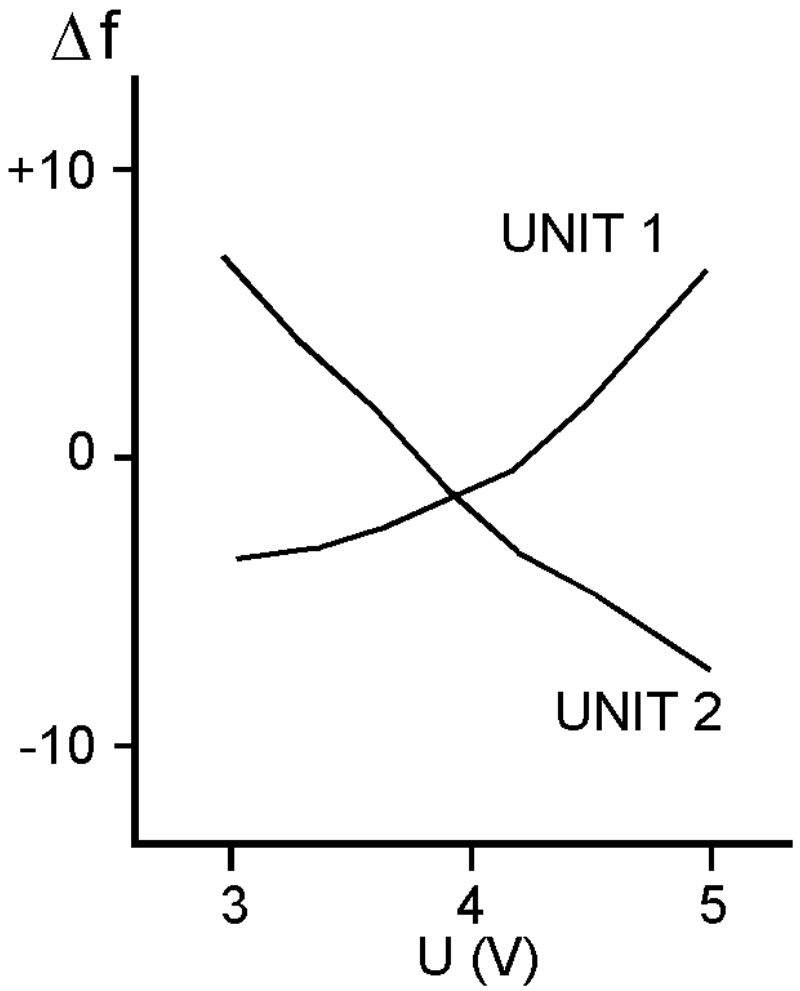

TIME AND FREQUENCY REMOTELY

THE STATIONARY TRANSMITTER

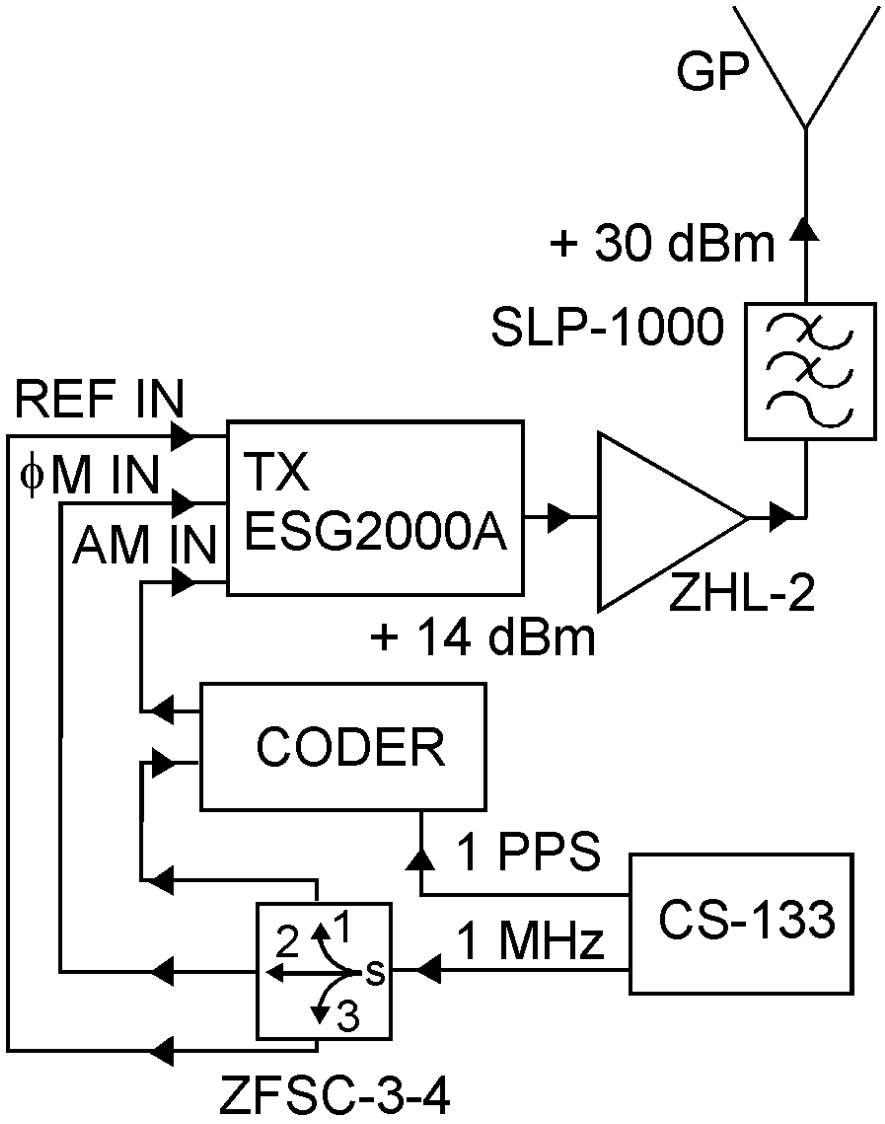

REMOTE RECEIVING EQUIPMENT

COMMUNICATIONS RECEIVER IN WIDEBAND FM DEMODULATION MODE PLUS A MODULATION DOMAIN ANALYZER WITH SCREEN PRINTER

MEASURED PERFORMANCE

Time TX -100 dBm 100 kHz FM dev. audio 1 kHz phase lock
Comparison 1 pps / 1kHz sine, no average

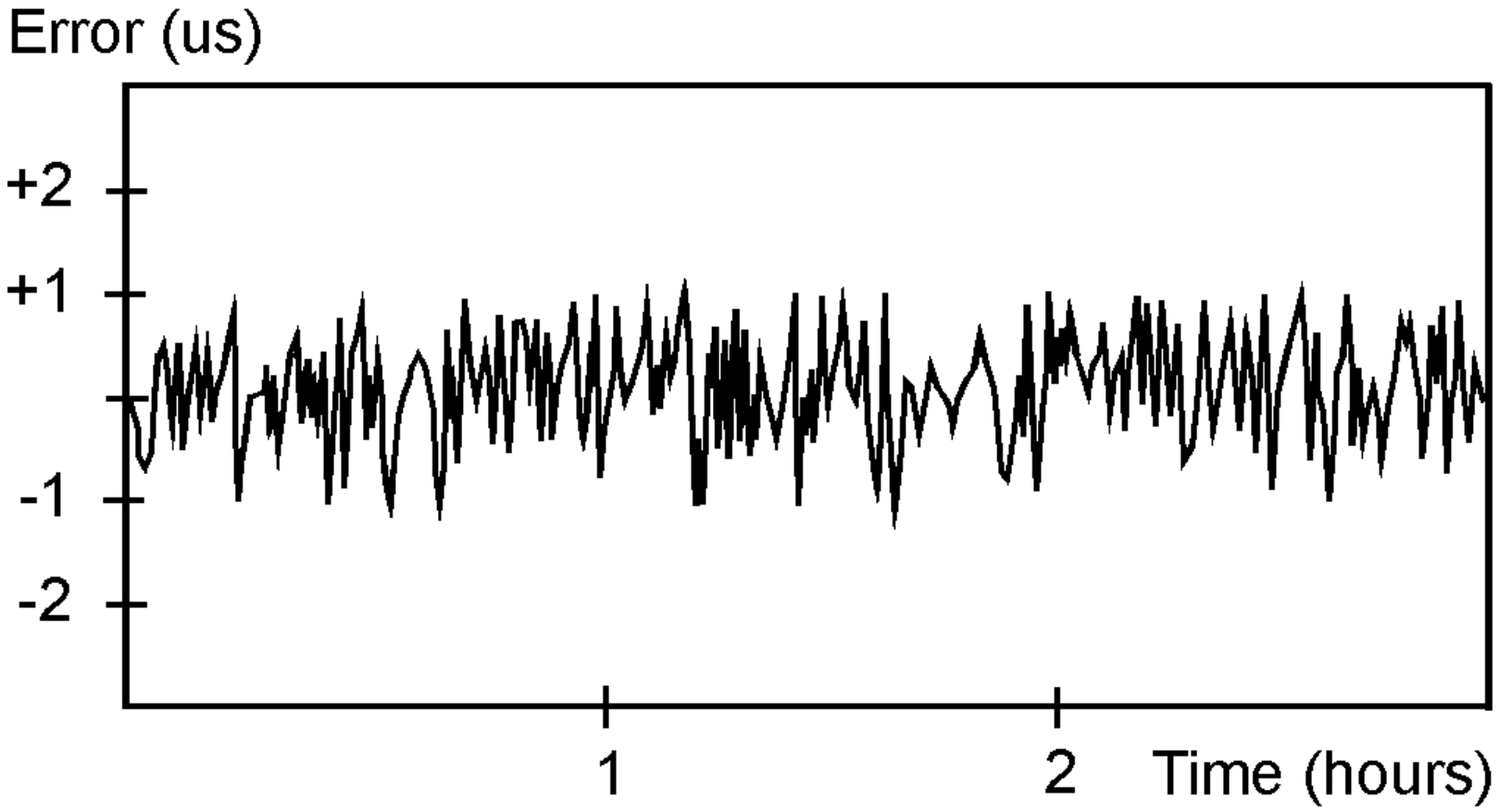

SEE SEPARATE ARTICLES STABLE_OSC.PDF AND TIME_DIFFERENCE.PDF FOR MODERN EXAMPLES ON THIS TOPIC

LECTURE FIVE

IMPEDANCE AND ITS CLOSE RELATIVES

- RESISTANCE
- CAPACITANCE
- INDUCTANCE
- RF IMPEDANCE

COMMERCIAL LRC METER

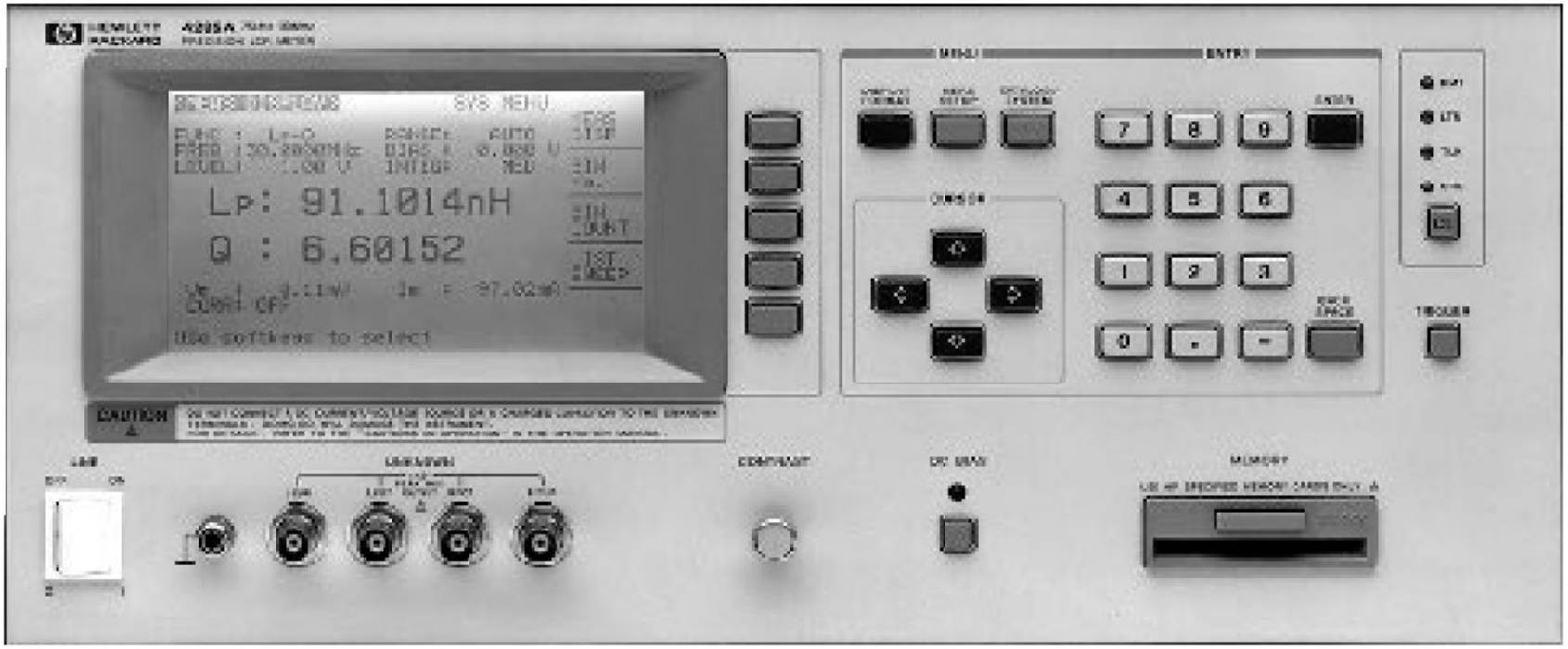

HP 4285A

SPECIFICATIONS

Measurement Display Range

Parameter	Range
Z, R, X	0.01 mΩ to 99.9999 MΩ
Y, G, B	0.01 nS to 99.9999 S
C	HP 4284A: 0.01 fF to 9.9999 F HP 4285A: 0.01 fF to 999.999 μF
L	HP 4284A: 0.01 nH to 99.9999 kH HP 4285A: 0.001 nH to 99.9999 H
D	0.000001 to 9.99999
Q	0.01 to 99999.9
θ	−180.000° to 180.000°
Δ%	−999.999% to 999.999%

Basic Measurement Accuracy

	Z, C, L	D
HP 4284A	0.05%	0.0005
HP 4285A	0.1%	0.001

@ 23° ± 5° C, after OPEN and SHORT correction

LC ERROR DUE TO FIXTURE

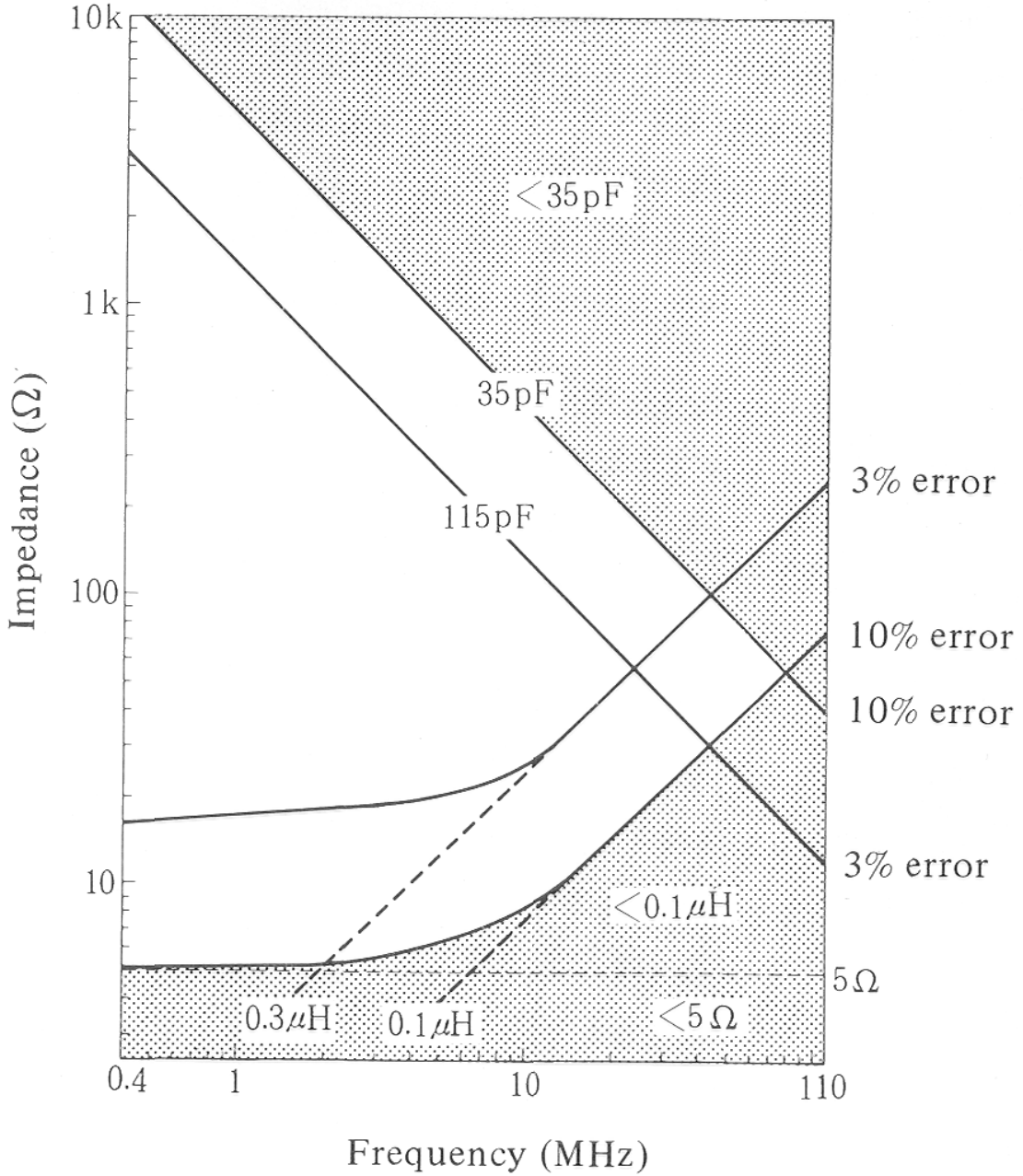

C ERROR DUE TO FIXTURE

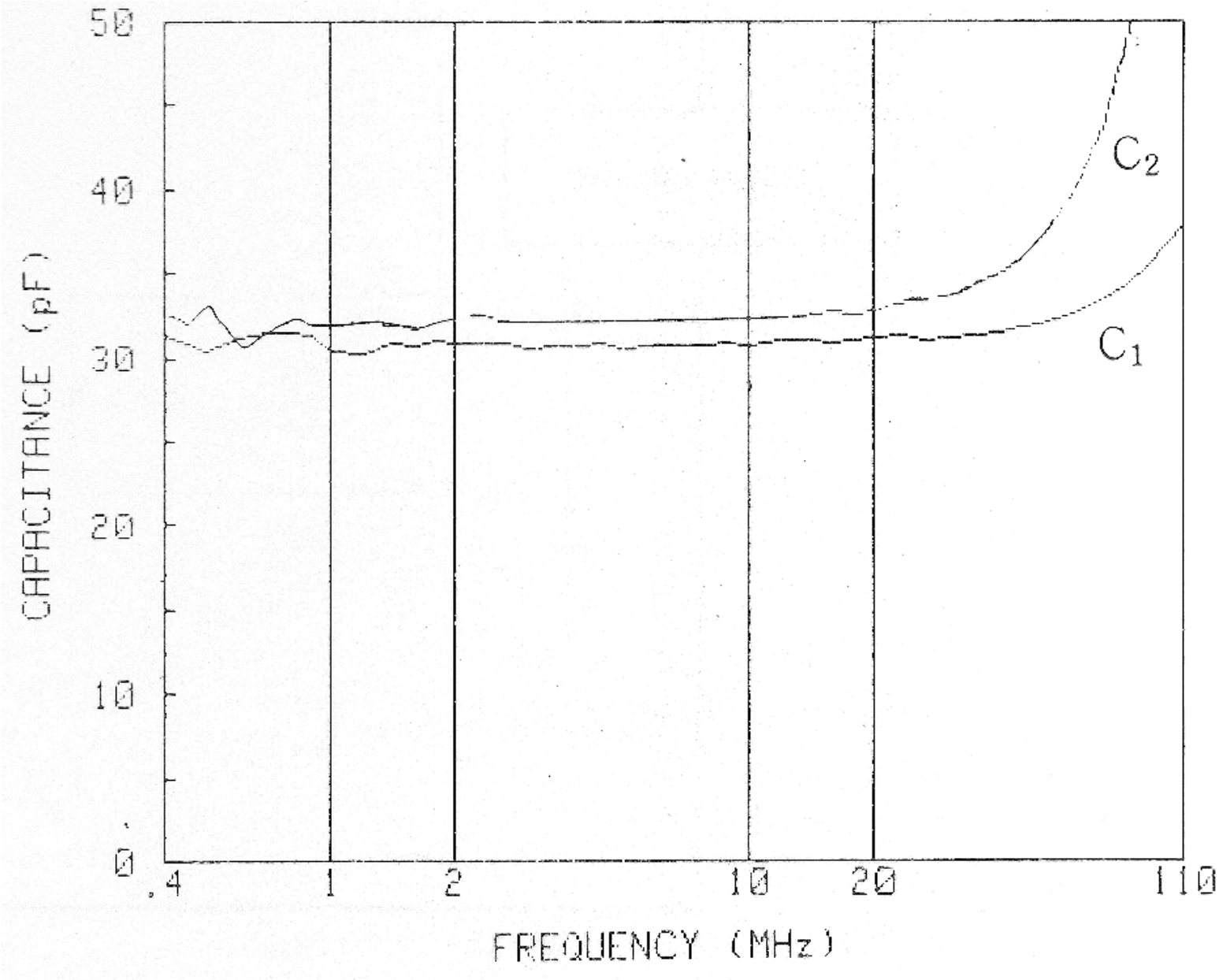

Q-MEASUREMENT ADD-ON

HP 42851A Precision Q Adapter

Used with the HP 4285A for resonant Q measurements
Parameters Measured: Q-L, Q-C
Q Measurement Range: 5.00 to 999.99
Basic Q Accuracy: 5%
Measurement Time: 75 ms to 1.5 s
Interface: Custom, directly controllable by the HP 4285A with Option 002
Option 001: SMD Text Fixture

A SPECIAL EXAMPLE:

ANTENNA IMPEDANCE AT 300 kHz

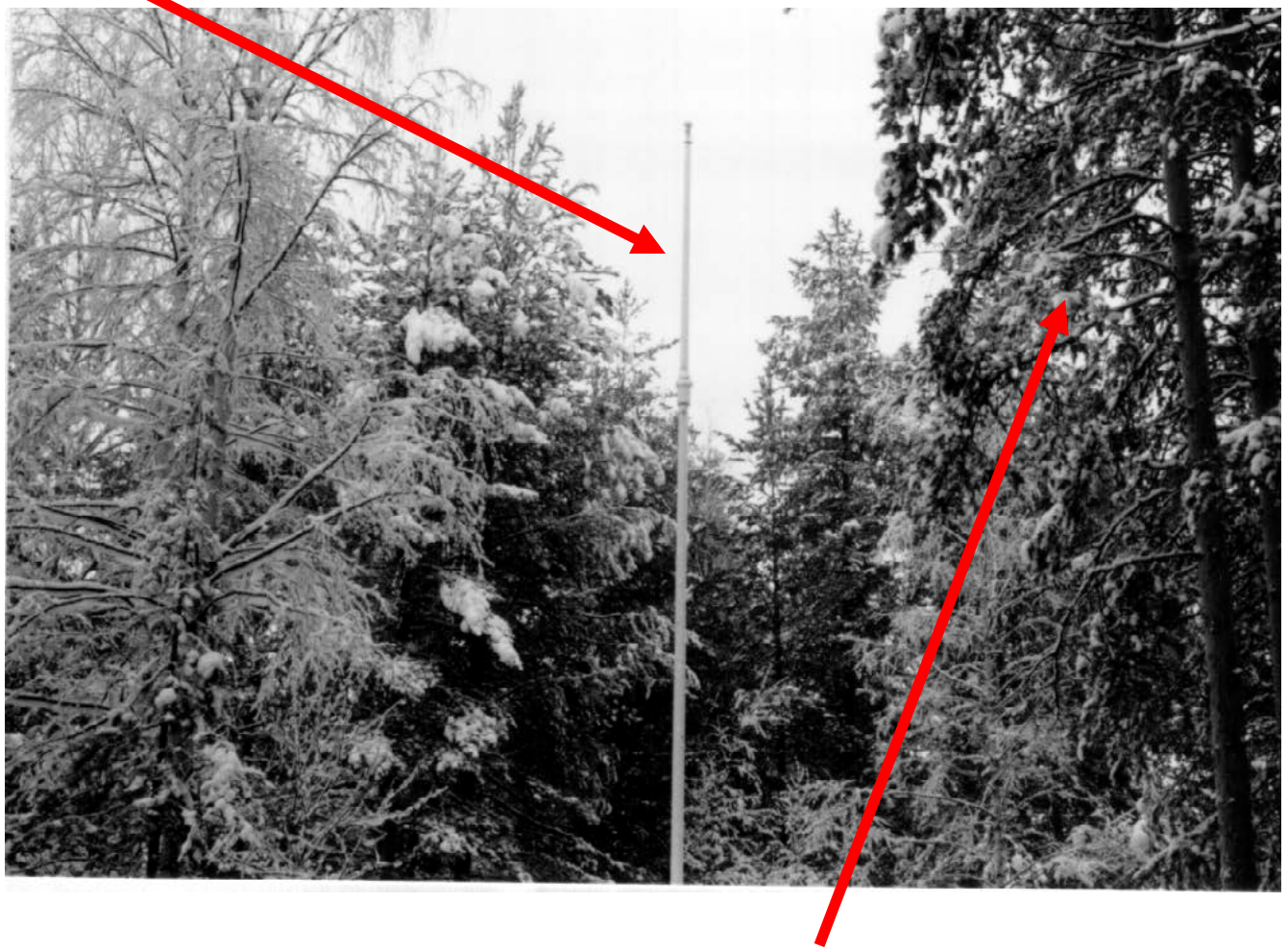

SOME SNOW-COVERED TREES

PROBLEM DESCRIPTION

- The input impedance of most HF antennas has to be measured after installation (due to physical size, site effects - particularly ground conductivity)
- An installed antenna receives a wide spectrum of transmissions, which would be analysed by a network analyser or vector impedance meter as reflected power
- If a high power amplifier is added to overcome external signals, the risk of test equipment damage will be substantial (unknown RL) and extensive tuning may be necessary

SOME DESIRES

- Automatic adjustment of test port output power according to the observed return loss would be fine
- Lowest possible tuning power would be beneficial in certain military applications to reduce the possibilities of hostile surveillance
- Optimal antenna performance is also based on adequate radiation efficiency, which should be measured

INTERFERENCE SPECTRUM AT HF

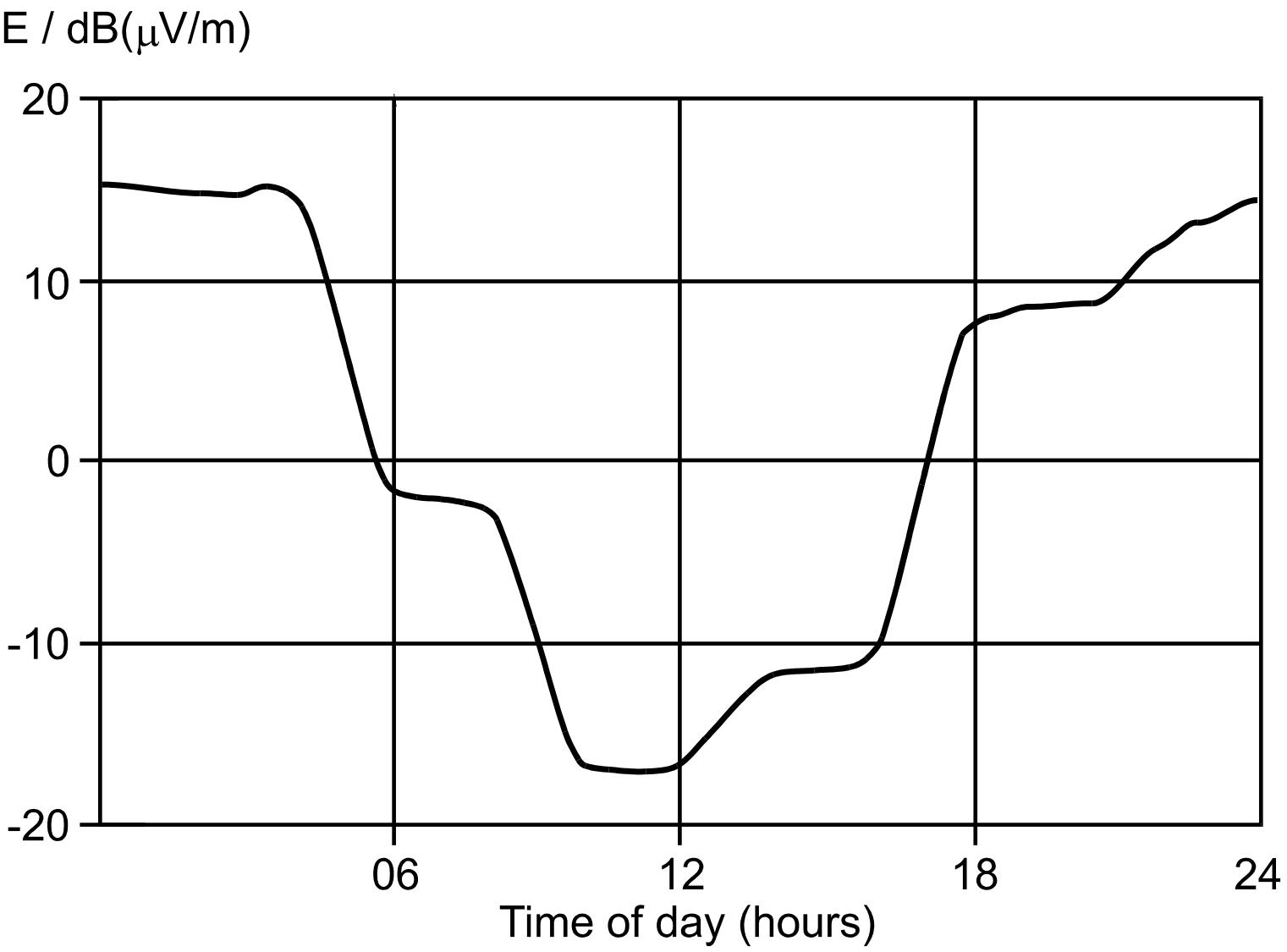

ANTENNA EFFICIENCY

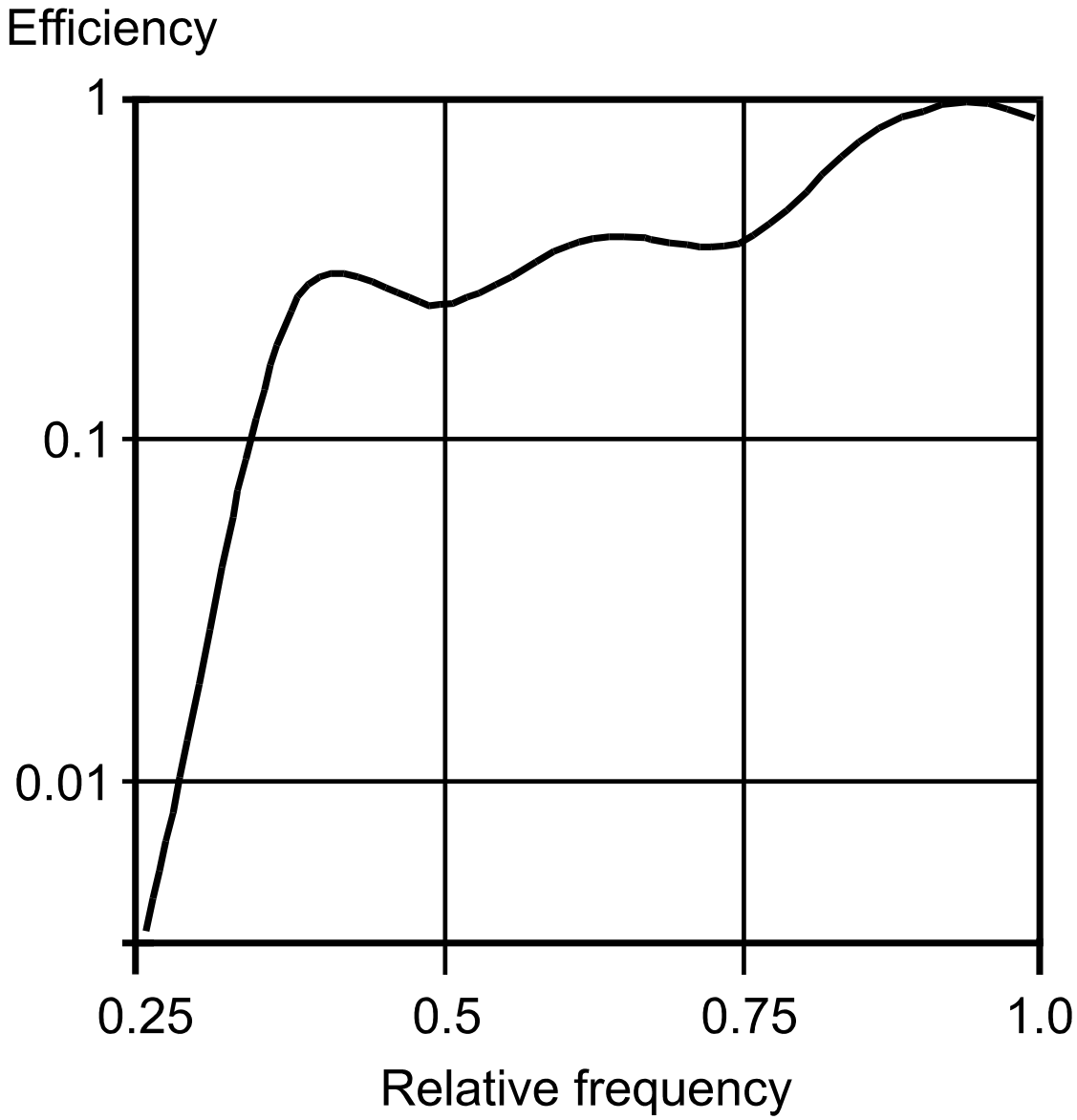

ORIGINAL DESIGN

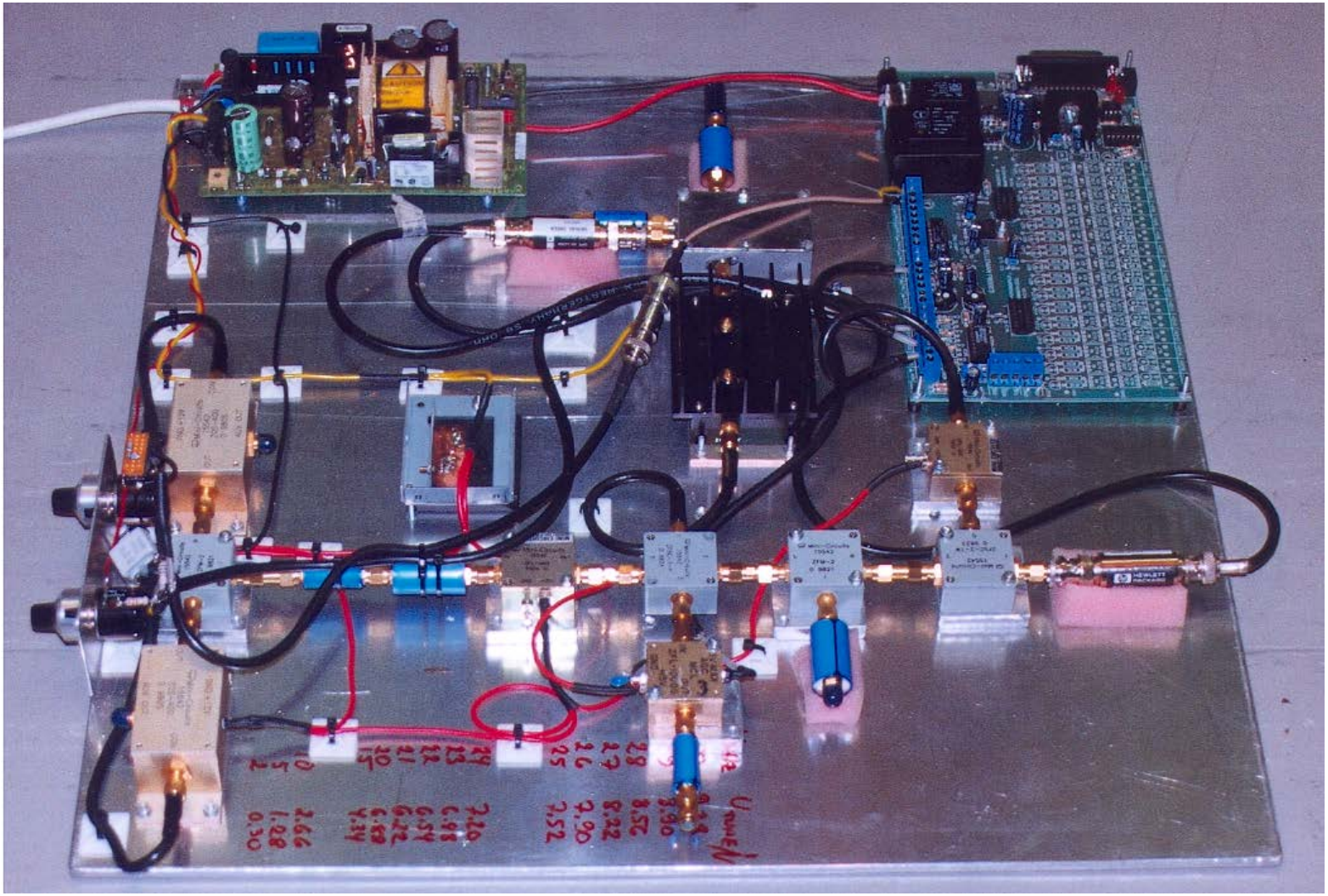

SUGGESTED ENHANCEMENTS

- A tracking filter has been inserted in front of the detector circuit.
- True transmitted power measurement has been found mandatory due to the excessive losses of antenna arrangements and their poor grounding networks

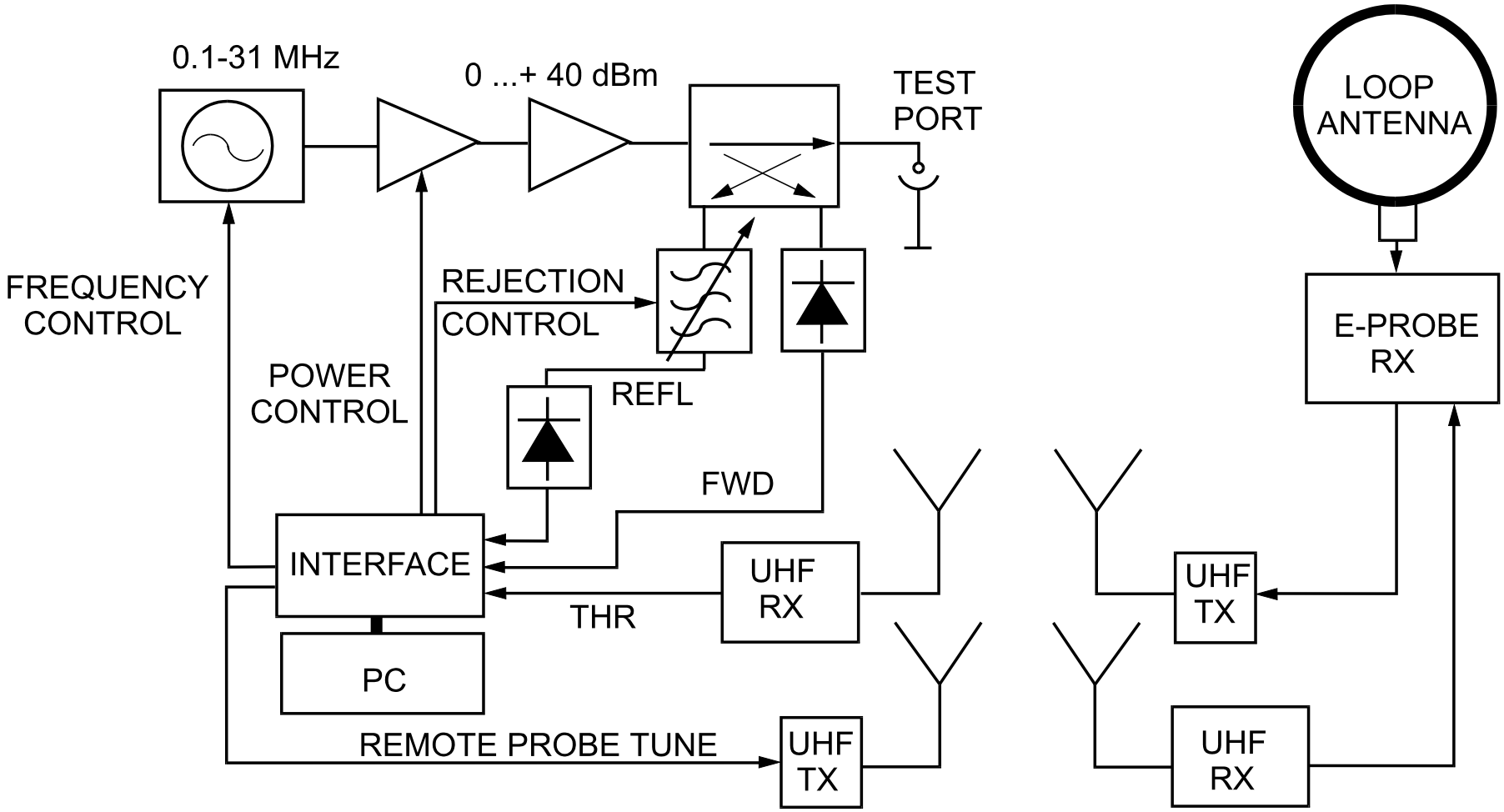
0.1-31 MHz
0 ...+ 40 dBm
TEST
PORT
LOOP
ANTENNA
FREQUENCY
CONTROL
REJECTION
CONTROL
POWER
CONTROL
REFL
FWD
E-PROBE
RX
INTERFACE
UHF
RX
UHF
TX
THR
PC
REMOTE PROBE TUNE
UHF
TX
UHF
RX

FIELD PROBE AND TELEMETRY IN PRACTICE

LIMITATIONS

- Distances > 1000 m difficult due to time constraints or UHF telemetry propagation
- Somewhat more tedious calibration actions
- Phase measurements require longer (40 ms) time constants (cost of the added filter bank)
- Near pass band edges little can be done to fully eliminate uncertainties
- Time constants must be adopted to the field probe's performance and to the S/N-ratio
- Effects of the near-by ground cannot be excluded from $\boldsymbol{E}$ calibration

SECOND EXAMPLE OF SPECIFIC IMPEDANCE MEASUREMENTS:

SOIL CONDUCTIVITY AT RF

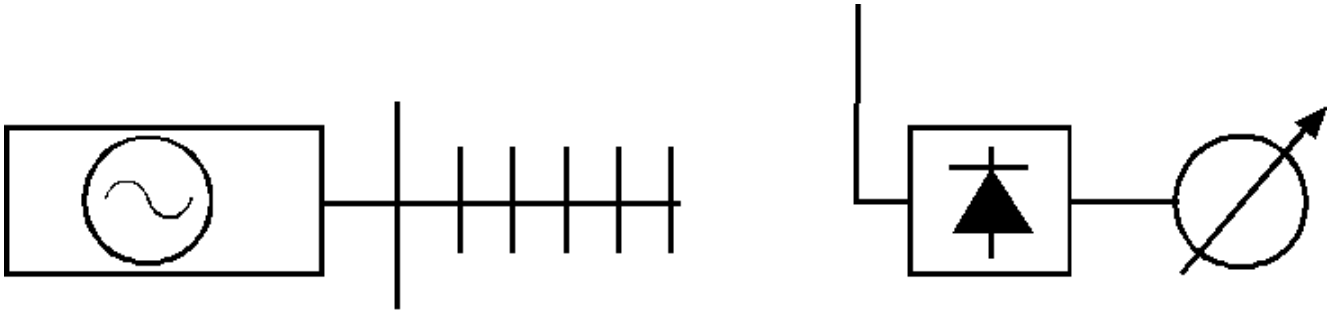

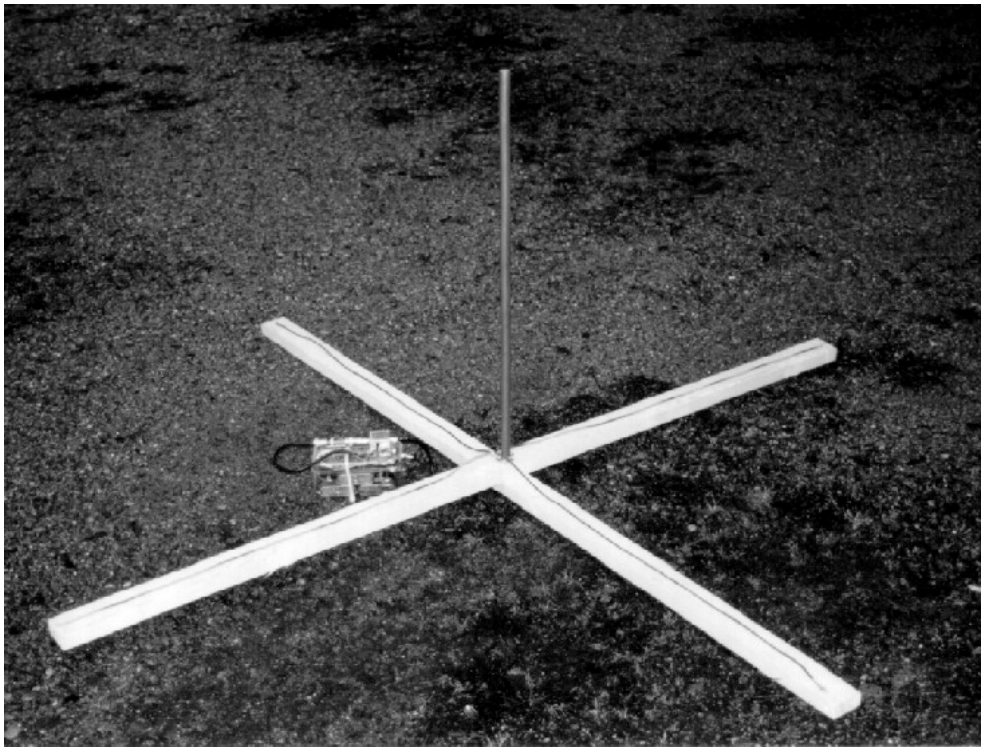

BLOCK DIAGRAM

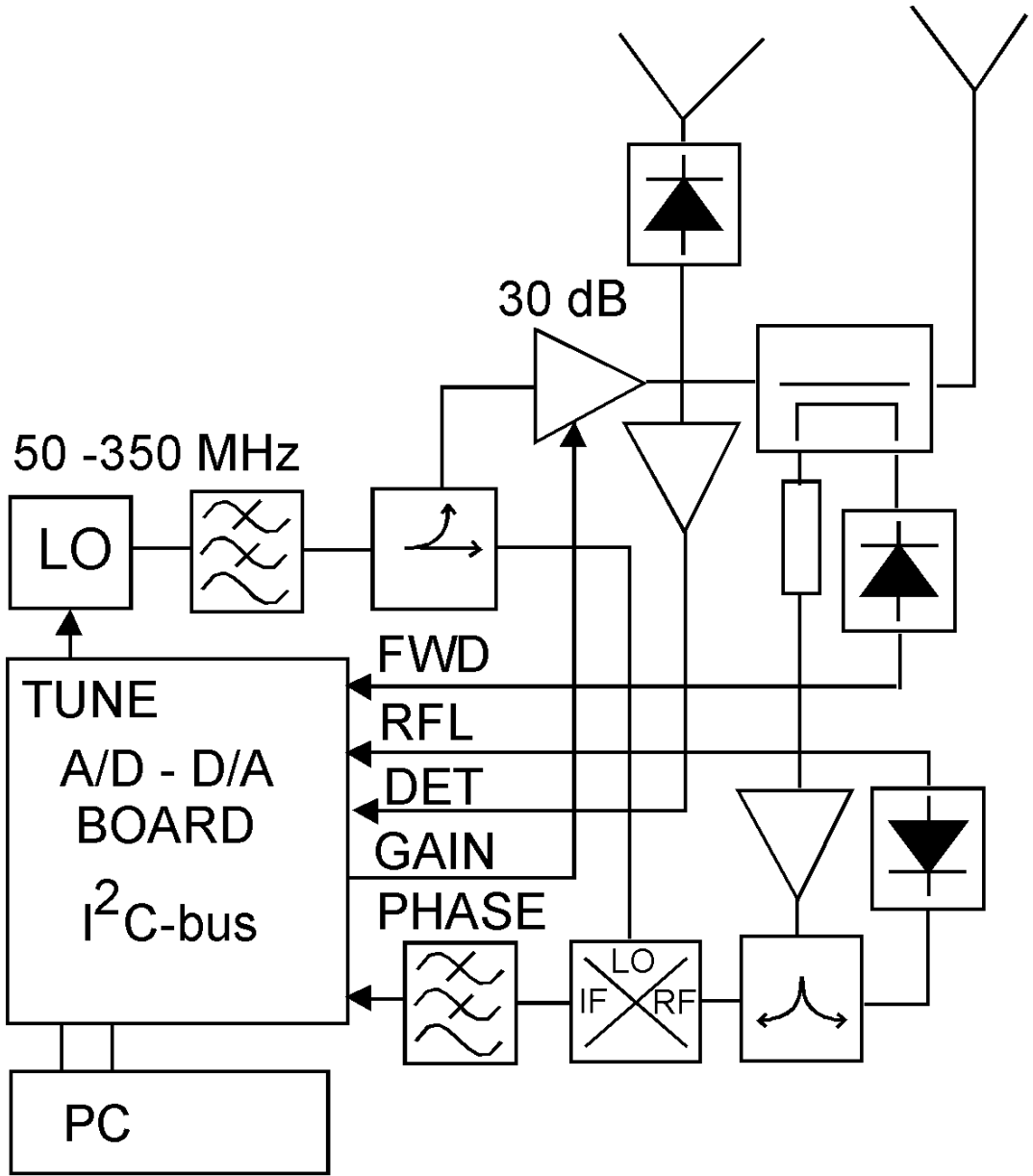

SEE SEPARATE THEMATIC ARTICLE NETWORK_ANALYZER.PDF FOR FURTHER DISCUSSIONS

LECTURE SIX

SPECTRUM MEASUREMENTS

- SWEEPING OR FFT ANALYZERS
- REAL-TIME ANALYZERS ?
- STEADY, UNMODULATED SIGNALS ARE RELATIVELY EASY
- AGILE, SWITCHED SIGNALS TYPICALLY CAUSE VIOLATIONS OF THE FILTER RISE-TIME RULE
- SWEEPING LOCAL OSCILLATORS HAVE LIMITED STABILITY, THUS FREQUENCY RESOLUTION ETC. IS NOT TOO GOOD

HETERODYNE ANALYZER INTERIOR

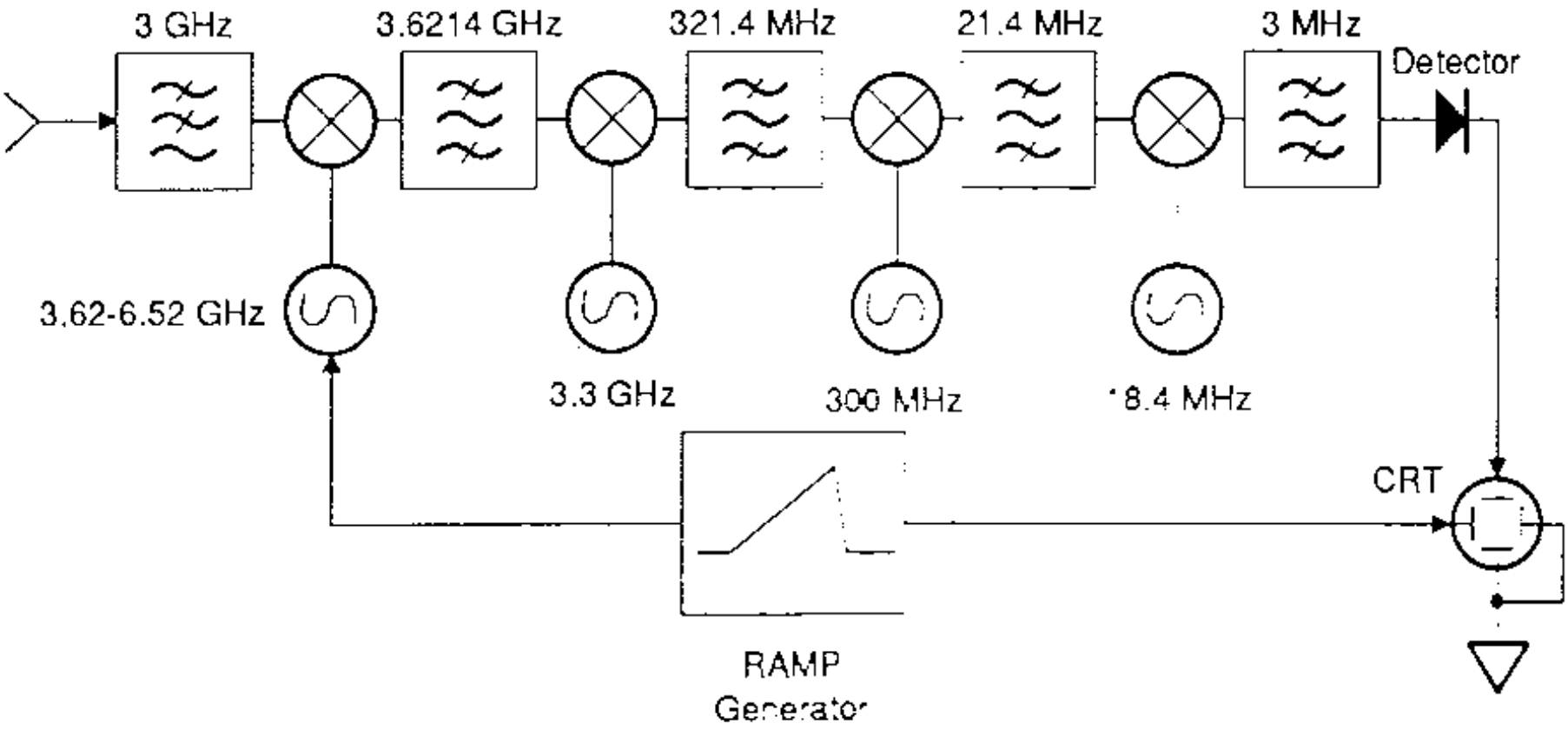

DIGITAL FILTERING

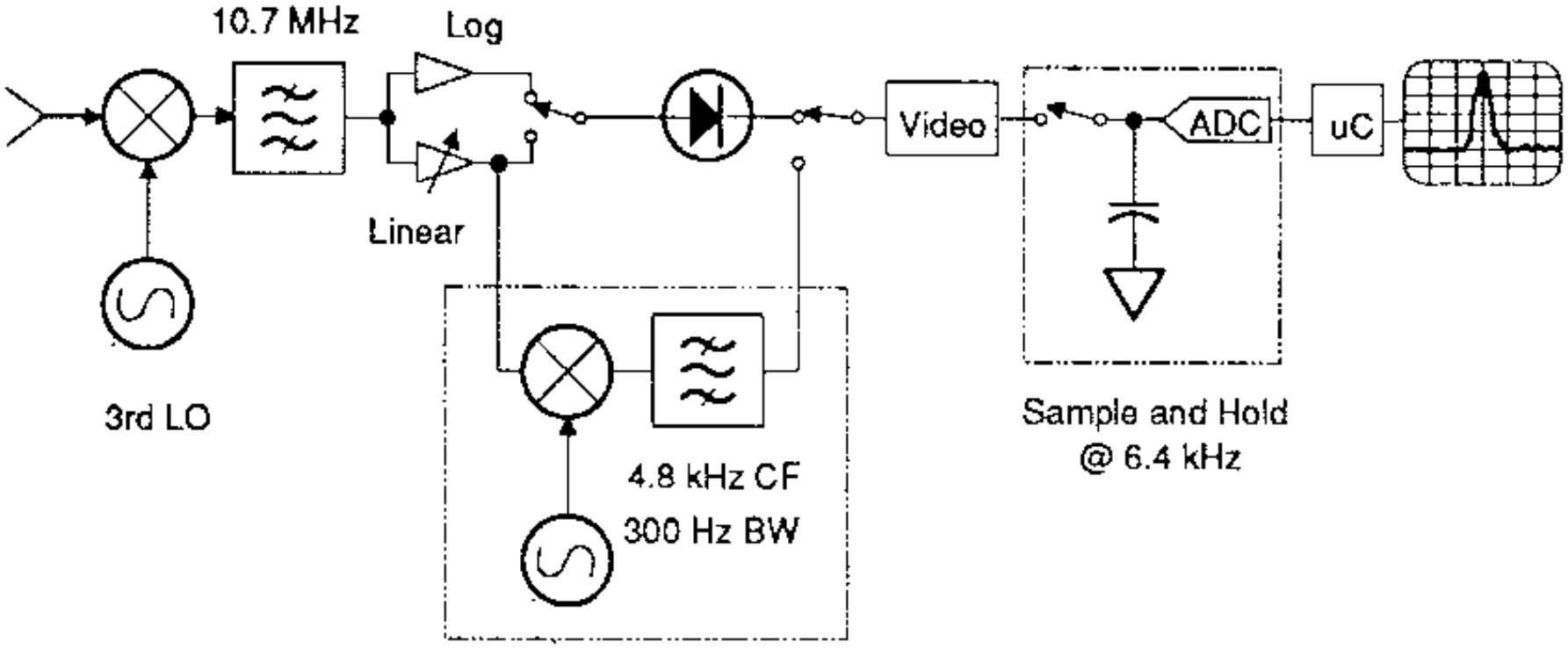

A BASIC LIMITATION

If we make the times equal and solve for sweep time, we have

$$k/(RBW) = [(RBW)(ST)]/(Span),$$

or

$$ST = k(Span)/(RBW)^2 .$$

The value of k is in the 2 to 3 range for the synchronously-tuned, near-gaussian filters used in HP analyzers. For more nearly square, stagger-tuned filters, k is 10 to 15.

ANALYZER LEVEL ACCURACY

- A CHAIN OF FREQUENCY CONVERSIONS, AMPLIFIERS AND DETECTORS
- INTERNAL SWITCHED CALIBRATION OR (SELDOM) EXTERNAL COAXIAL
- CAL SOURCE FREQUENCY A SMALL FRACTION OF UNITS FULL RANGE
- ATTENUATOR SETTINGS (10 dB STEPS) CAUSE FURTHER ERRORS
- FIRST STAGES ARE WIDEBAND IN NATURE – LOOK FOR COMPRESSION

AN EXAMPLE OF NUMERICS

Relative	**±dB**
Frequency response	0.5-4
Display fidelity	0.5-2
ΔRF attenuator	0.5-2
ΔIF attenuator/gain	0.1-1
ΔResolution bandwidth	0.1-1
ΔCRT scaling	0.1-1
Absolute	
Calibrator	0.2-1

THE DYNAMIC RANGE DUE TO NOISE

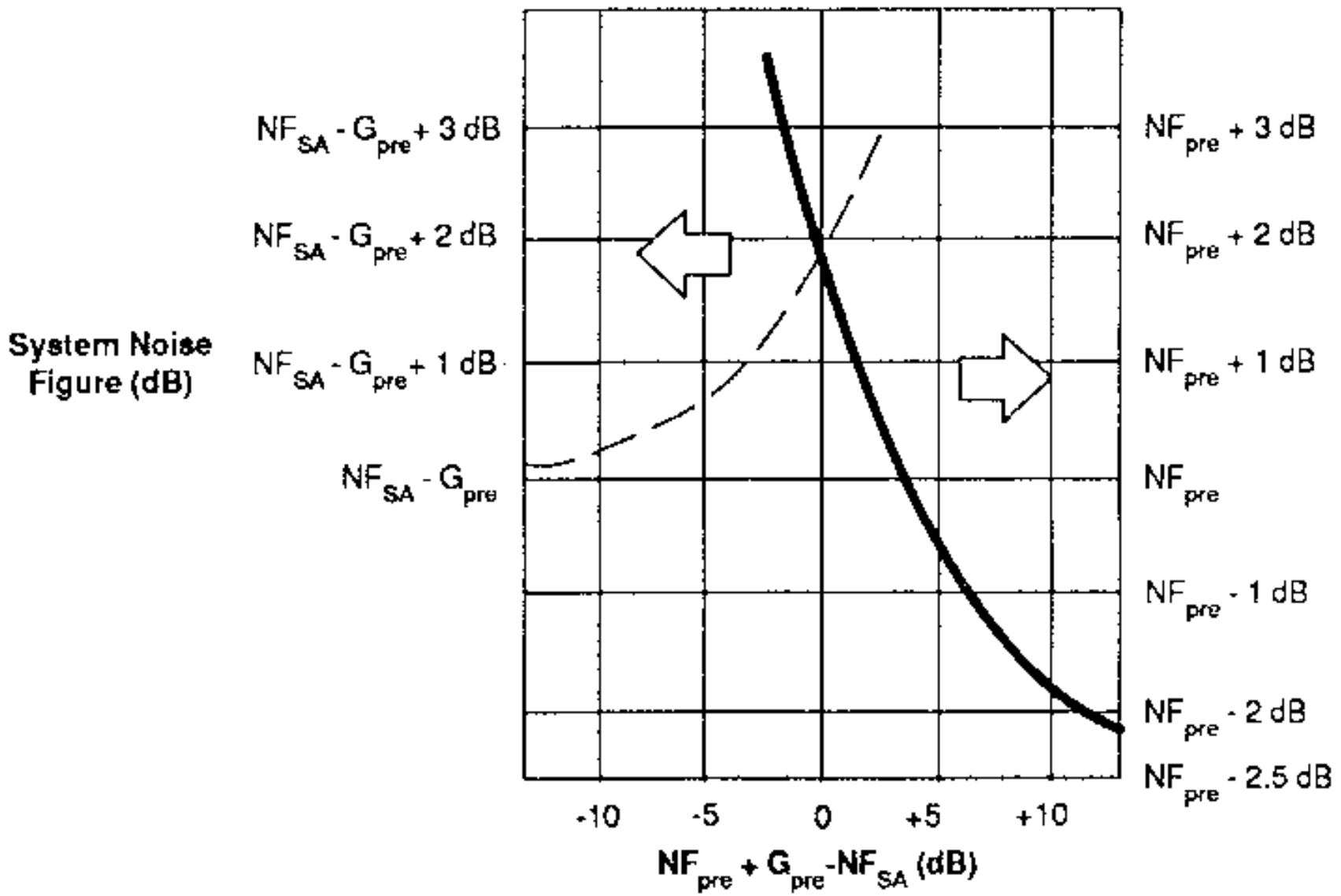

EXAMPLE OF MEASURED RESULT:

VCO SPECTRUM

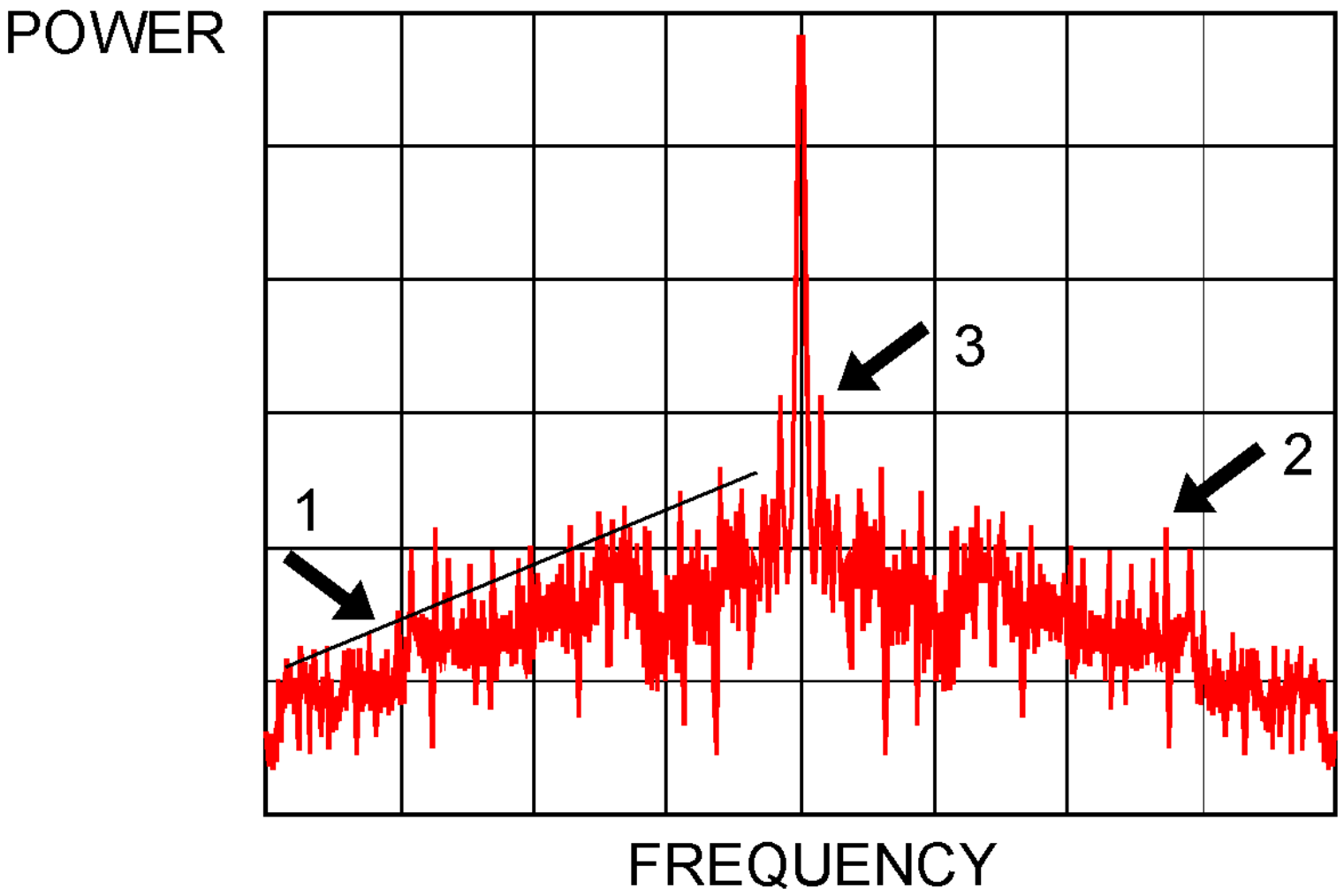

ANALYZER PHASE NOISE

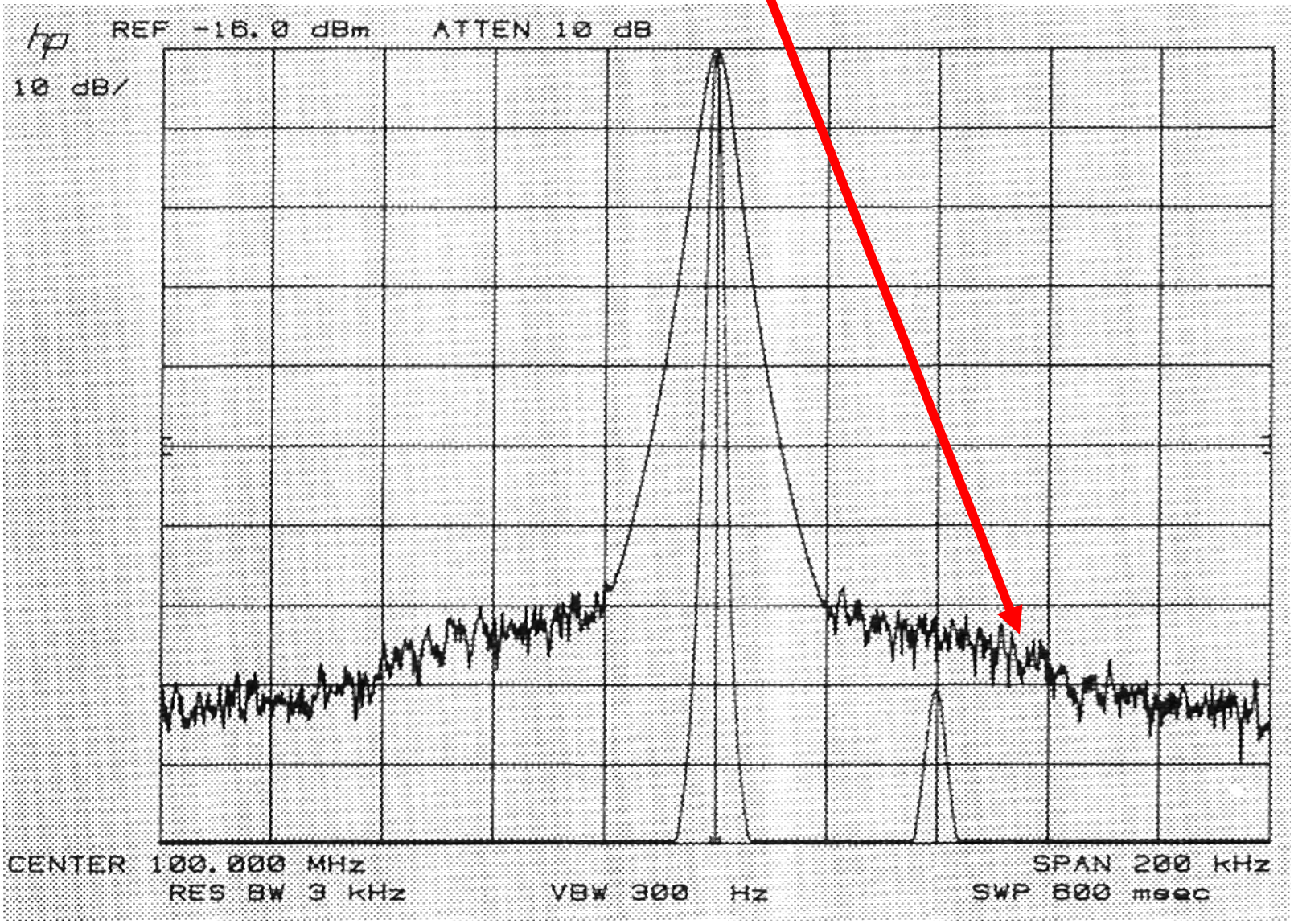

PEAK POWER OF NARROW PULSES

GENERALLY DOOMED TO FAIL WITH A CONVENTIONAL ANALYZER

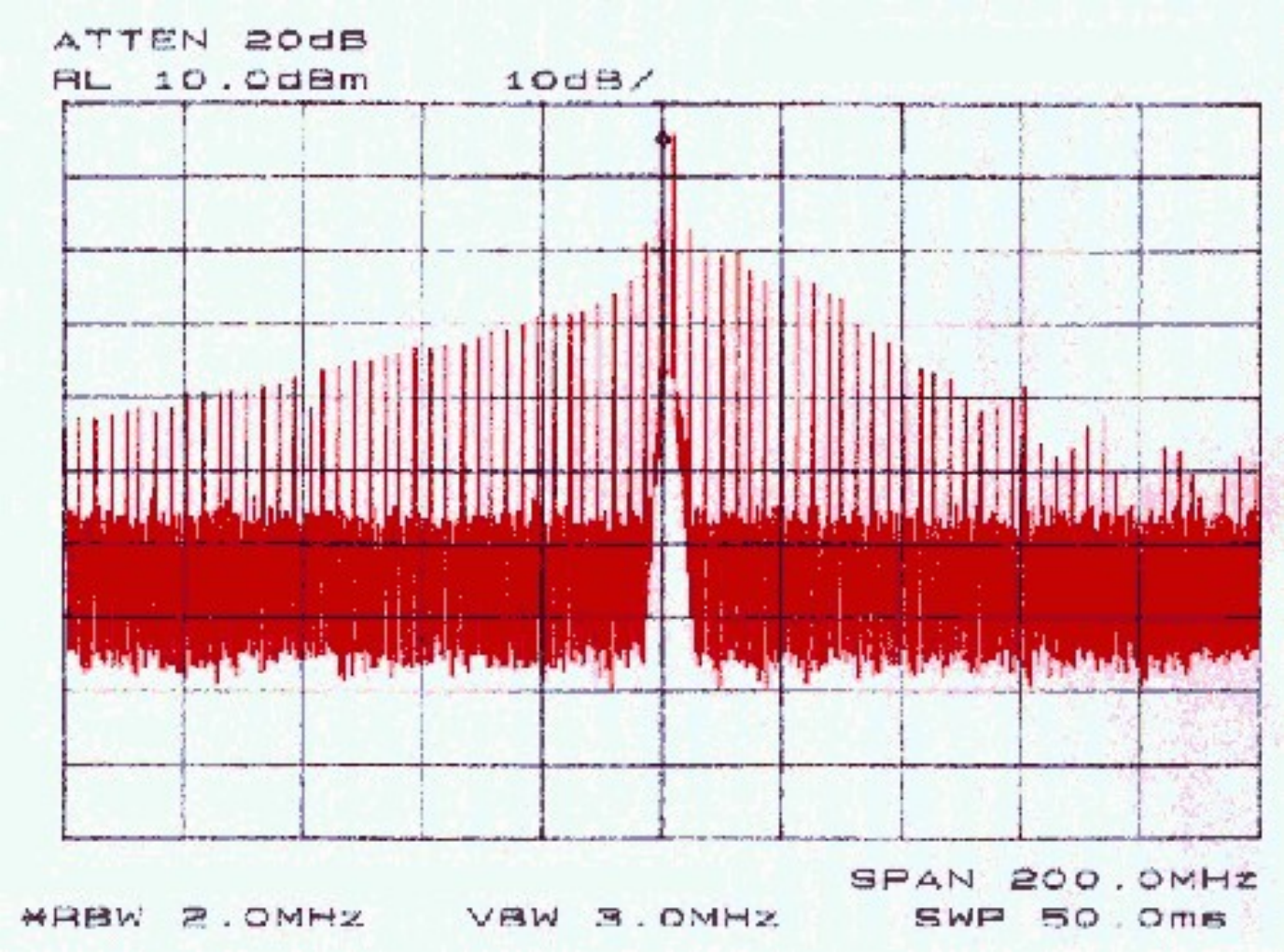

COMMERCIAL ANALYZERS

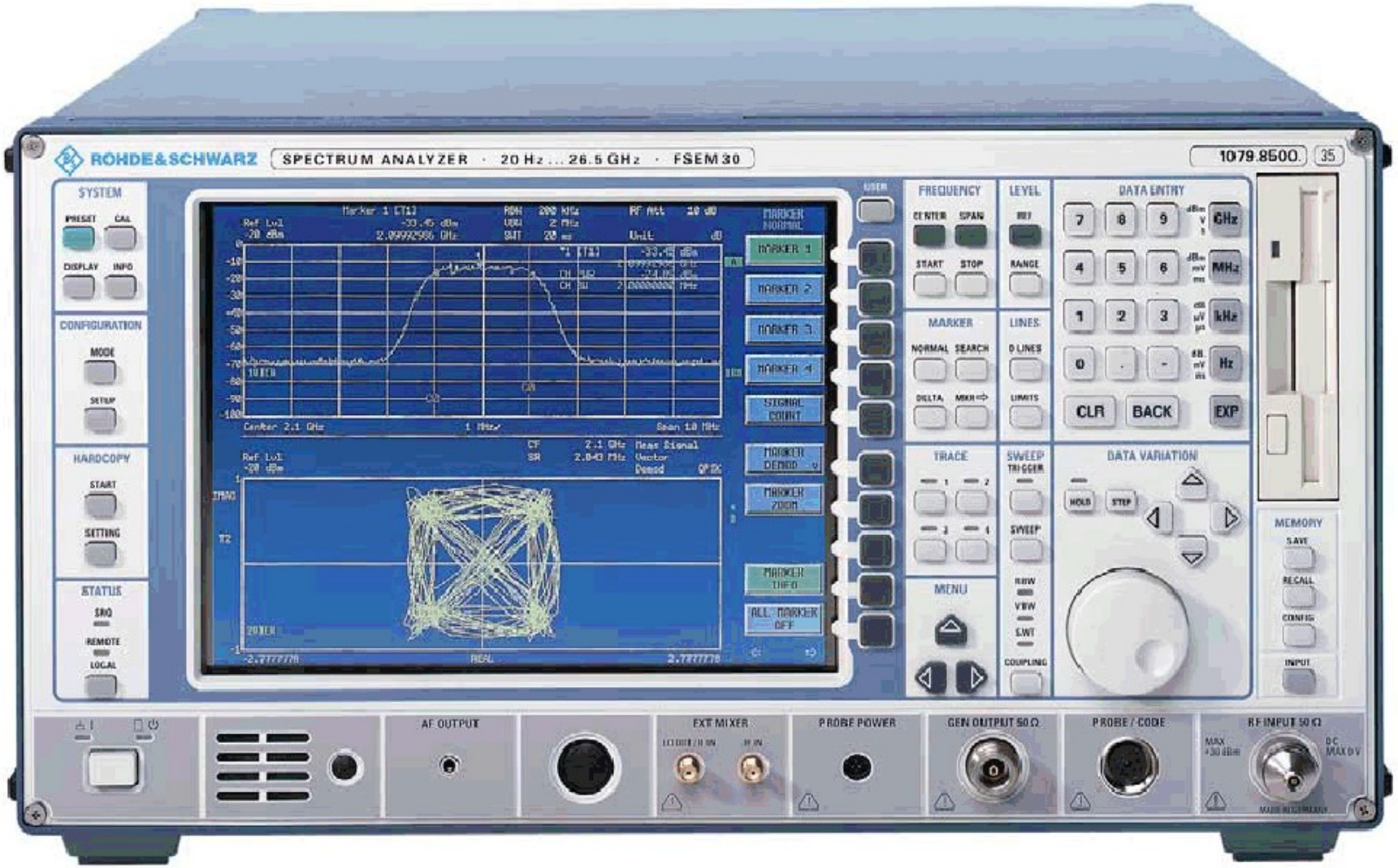

SPECIFICATIONS

Total measurement uncertainty (0 to 50 dB below reference level, span/RBW <100, rss 95% reliability)

<1 GHz	<1 dB
1 GHz to 3,5/7 GHz	<1,5 dB

Resolution bandwidths

3 dB bandwidths	10 Hz to 10 MHz	1 Hz to 10 MHz	10 Hz to 10 MHz	1 Hz to 10 MHz
Steps	1/2/3/5	1/2/3/5	1/2/3/5	1/2/3/5
Shape factor 60 : 3 dB (1 kHz to 2 MHz)	<15	<12	<15	<12
Video bandwidths	1 Hz to 10 MHz	1 Hz to 10 MHz	1 Hz to 10 MHz	1 Hz to 10 MHz
Steps	1/2/3/5	1/2/3/5	1/2/3/5	1/2/3/5

Level

Displayed noise floor, average level in dBm (10 Hz bandwidth, 0 dB RF attenuation,VBW = 1 Hz,

20 Hz	—	–80	—	–74
1 kHz	—	–110	—	–104
10 kHz	–90	–125	–84	–119
100 kHz	–110	–135	–104	–129
1 MHz	<–130, typ. –135	<–145, typ. –150	<–125, typ. –130	<–142 typ. –145
10 MHz to 3.5/6 GHz	<–145, typ. –150	<–145, typ. –150	<–142, typ. –147	<–142, typ. –147
6 GHz to 7 GHz	—	—	<–139	<–139

MORE SPECIFICATIONS

Sweep time		
Display range	0 Hz	1 µs to 2500 s
	≥10 Hz	5 ms to 16000 s
Picture refresh rate	>20 updates/s with 1 trace	
	>15 updates/s with 2 traces	
Sampling rate	50 ns (20 MHz A/D converter)	
Sweep trigger	free run, single, line, video, gated, delayed, external	
Zero span	additionally pretrigger, posttrigger, trigger delay	

Level

Display range	noise floor displayed to 30 dBm
Max. input level	
RF attenuation 0 dB/≥10 dB	
DC voltage	0 V
CW RF power	20 dBm (= 0.1 W)/30 dBm (= 1 W)
Pulse spectral density	97 dBµV/MHz
Max. pulse energy (10 µs)	1 mWs/FSEM/K: 0.5 mWs (RF attenuation ≥10 dB)

COMPETITOR

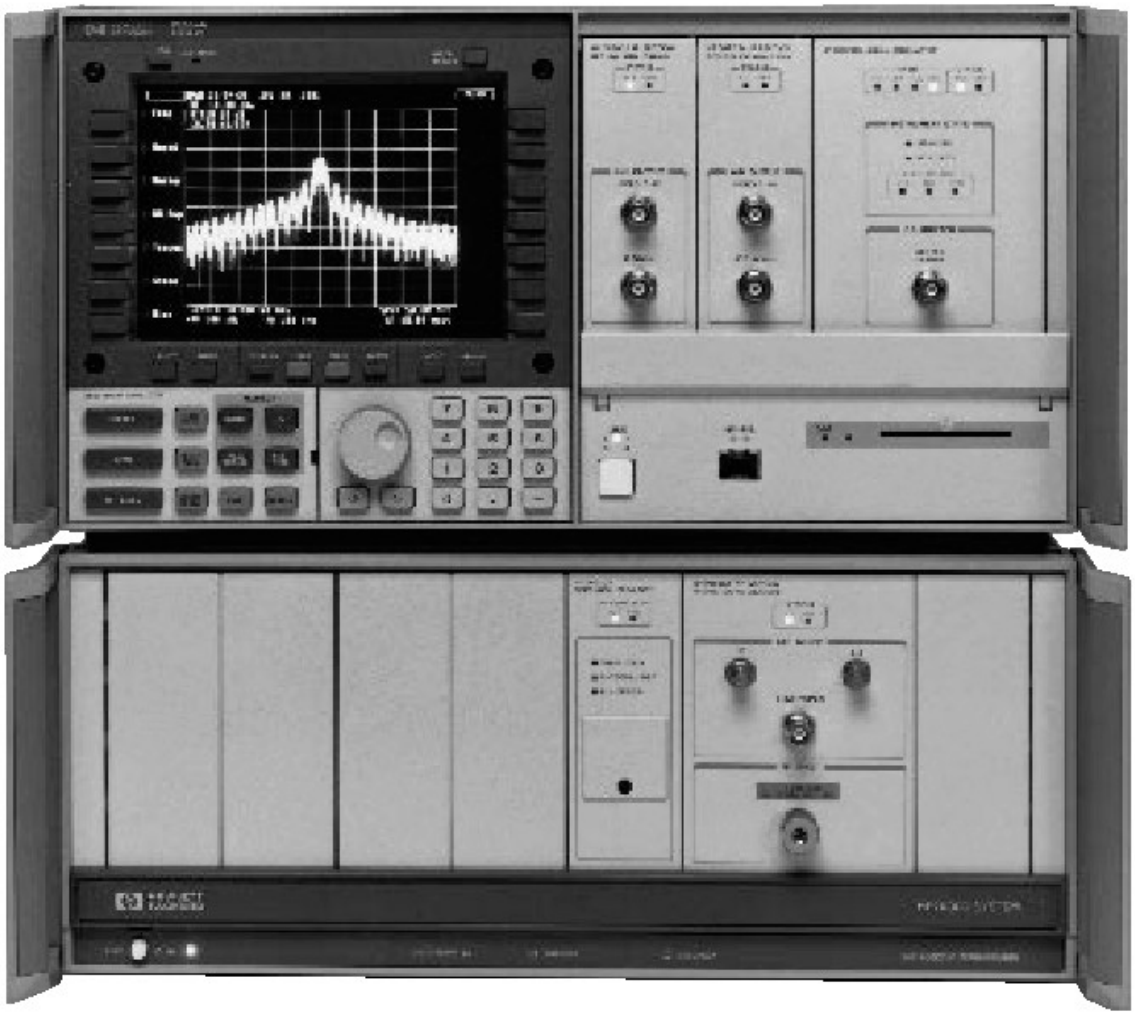

HP 71209A

SPECIFICATIONS

Resolution bandwidth range	10 Hz to 300 kHz; 3 MHz option
Phase noise	–108 dBc/Hz at 10 kHz offset
Optimum dynamic range (2nd/3rd order)	82 dB/92 dB
Amplitude accuracy (relative frequency + lesser of scale fidelity or IF gain accuracy)	± 2 dB (± 0.9 dB) [1]
Displayed average noise level, 10 Hz RBW	
at 2.9 GHz	–131 dBm
at 22 GHz	—
at 26.5 GHz	—

[1] ± 0.9 dB transfer accuracy using the HP 70100A–H01 modular power meter.

SEE SEPARATE ARTICLE SPECTRUM_ANALYZER.PDF FOR FURTHER DISCUSSION ON HIGH END ANALYZERS

MODULATION MEASUREMENTS

- AM DEPTH
- FM OR FSK DEVIATION
- PHASE DEVIATION

DEFINING AM DEPTH

- ACCURACY CAN NOT BE BETTER THAN THAT OBTAINABLE IN POWER LEVEL MEASUREMENTS AT THE RF FREQUENCY IN USE

WHY ?

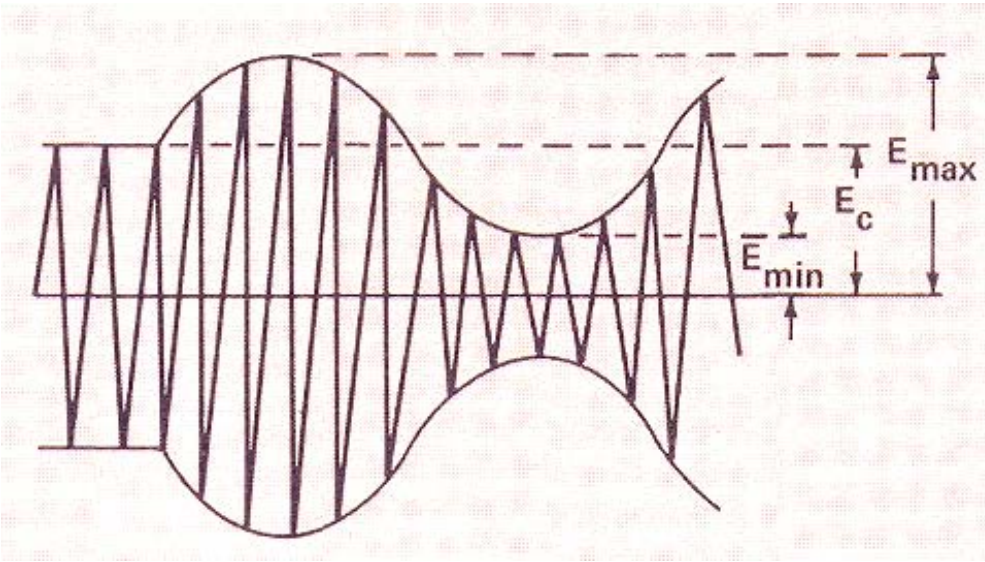

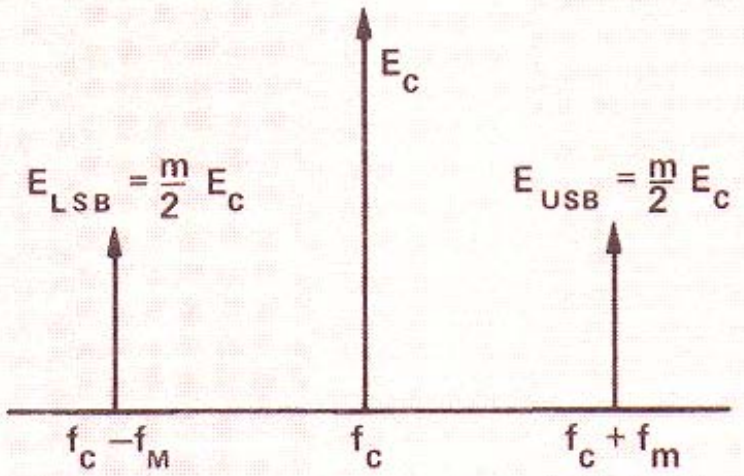

LOW AM PERCENTAGE (2 PER CENT)

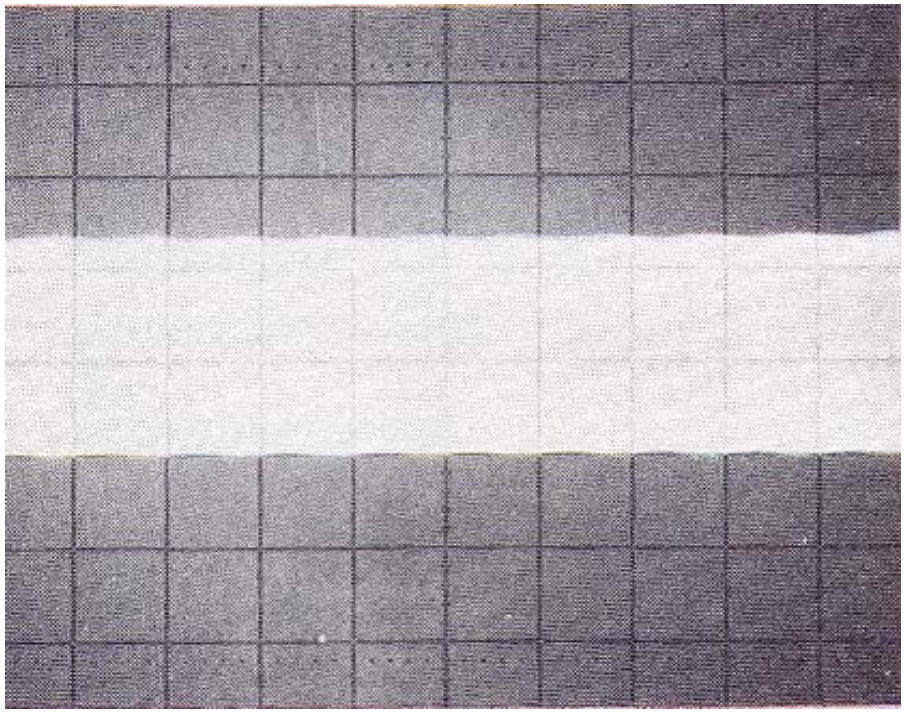

SCOPE

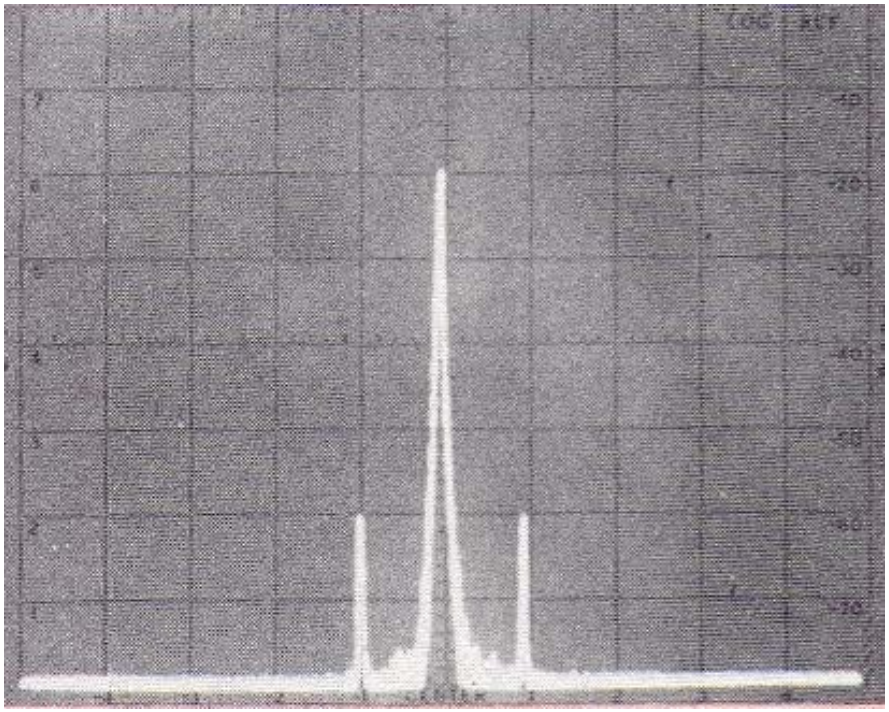

SPECTRUM

SIDEBAND LEVEL TO AM %

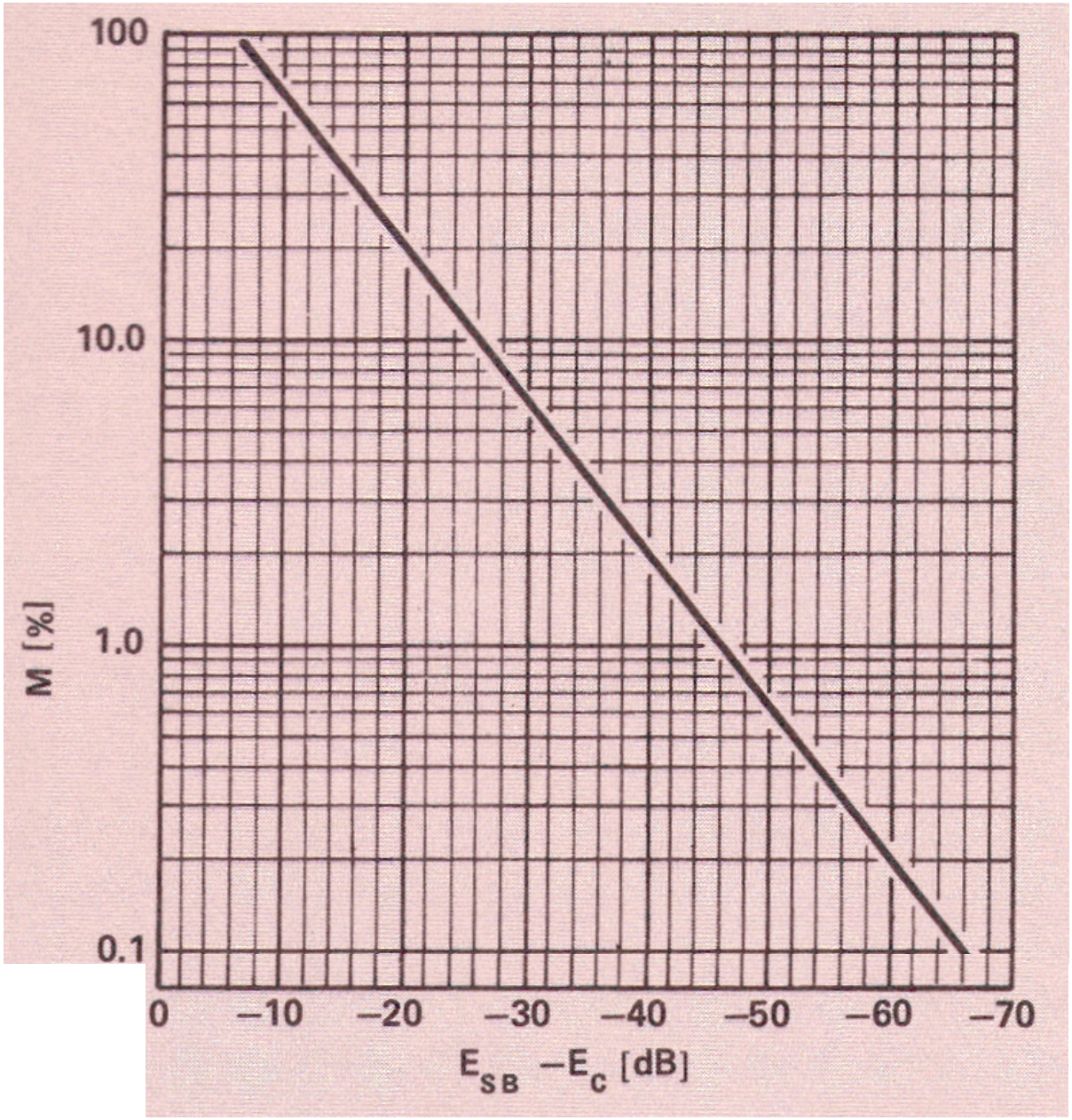

SCOPE RECORDING OF AM WITH DISTORTION

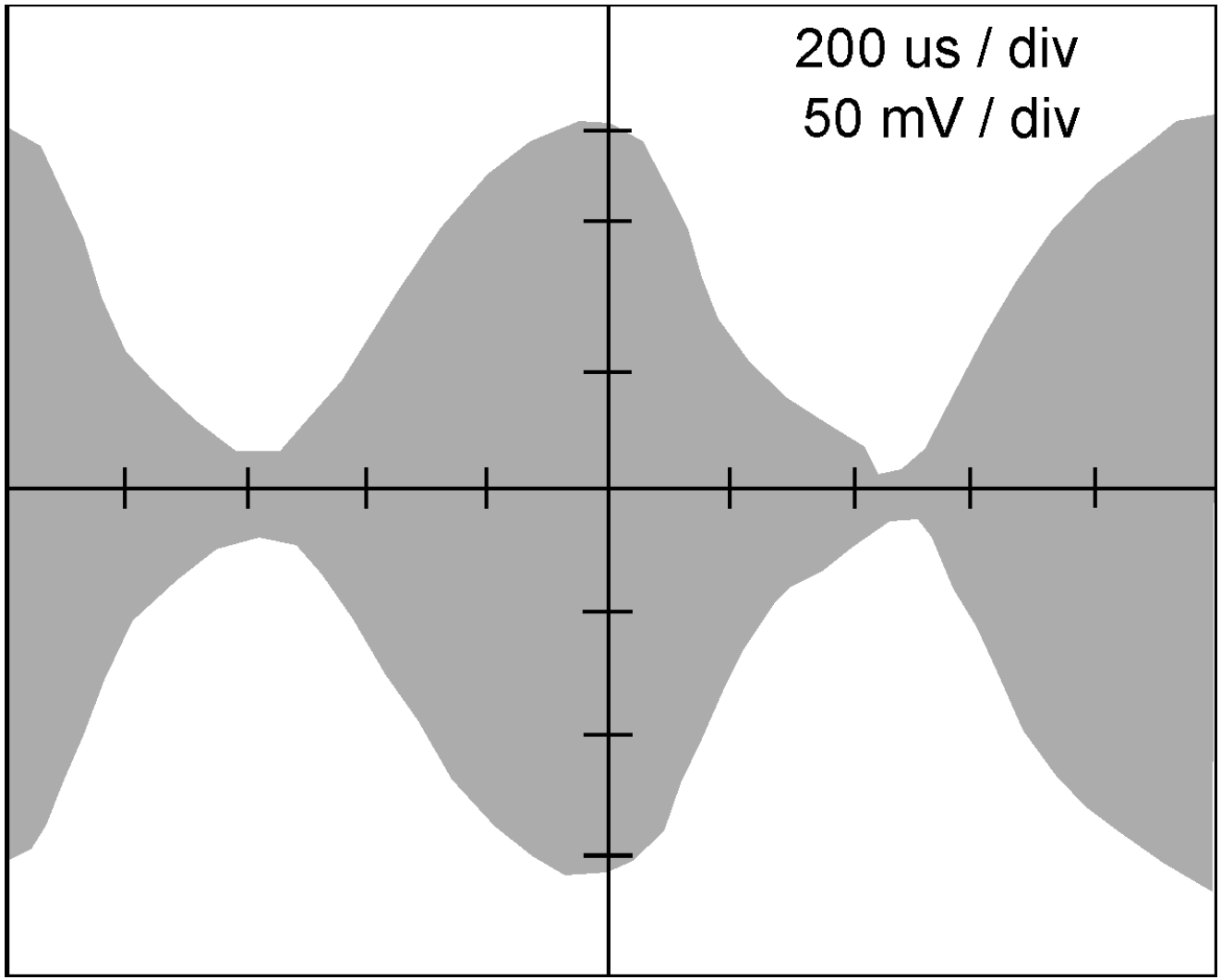

INITIAL DESIRE: SINE WAVE MODULATED BY A SINE WAVE

SPECTRUM OF DISTORTED AM

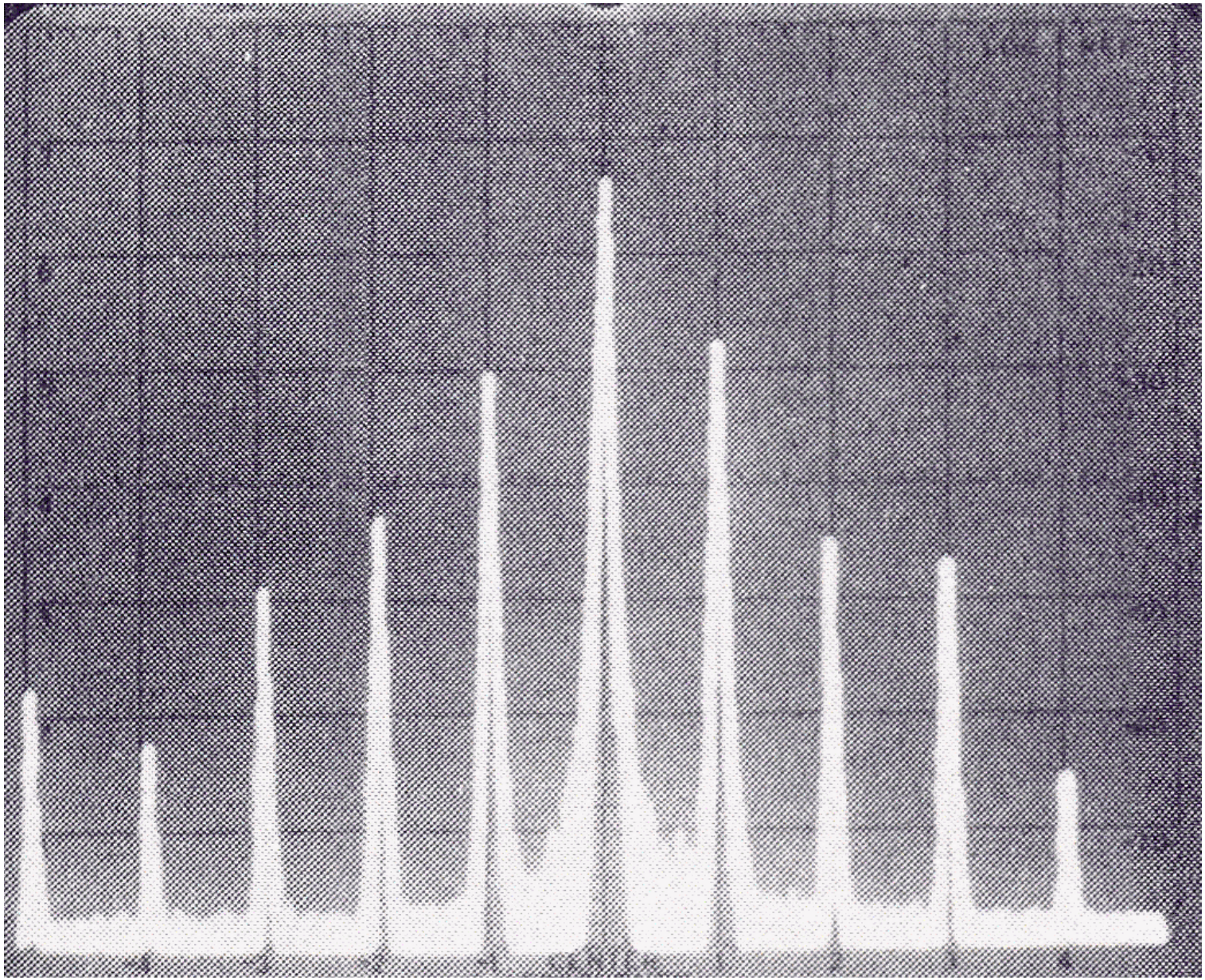

SOME DEFINITIONS FOR AM MEASUREMENT

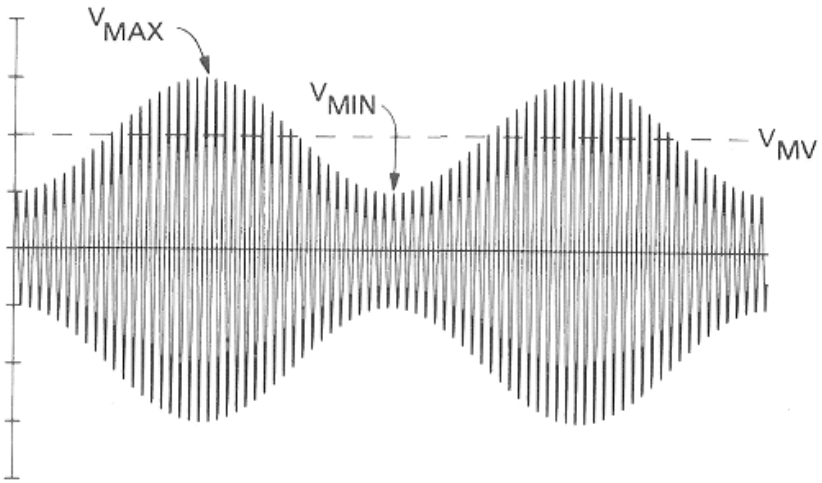

Selected detector	The FAM calculates m according to the formula
P+	$m+ = \frac{V_{MAX} - V_{MV}}{V_{MV}} \times 100$
P−	$m- = \frac{V_{MV} - V_{MIN}}{V_{MV}} \times 100$
$\frac{P+P}{2}$	$m\pm = \frac{V_{MAX} - V_{MIN}}{2 \cdot V_{MV}} \times 100$
RMS	$m = \frac{V_{RMS}}{V_{MV}} \times 100$
RMS $\cdot \sqrt{2}$	$m = \frac{V_{RMS} \cdot \sqrt{2}}{V_{MV}} \times 100$

MODULATION METER PRINCIPLES

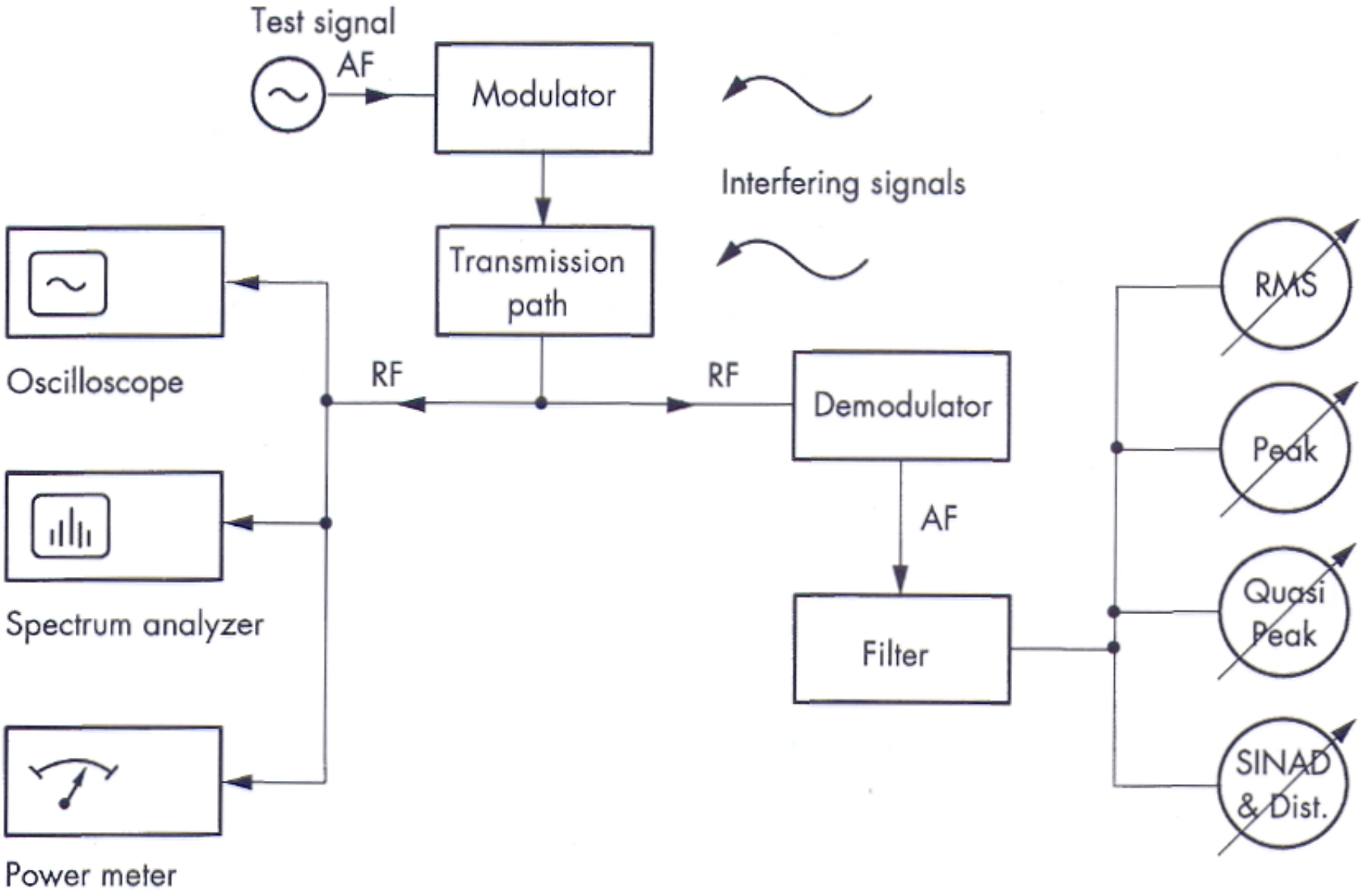

COMMERCIAL UNITS

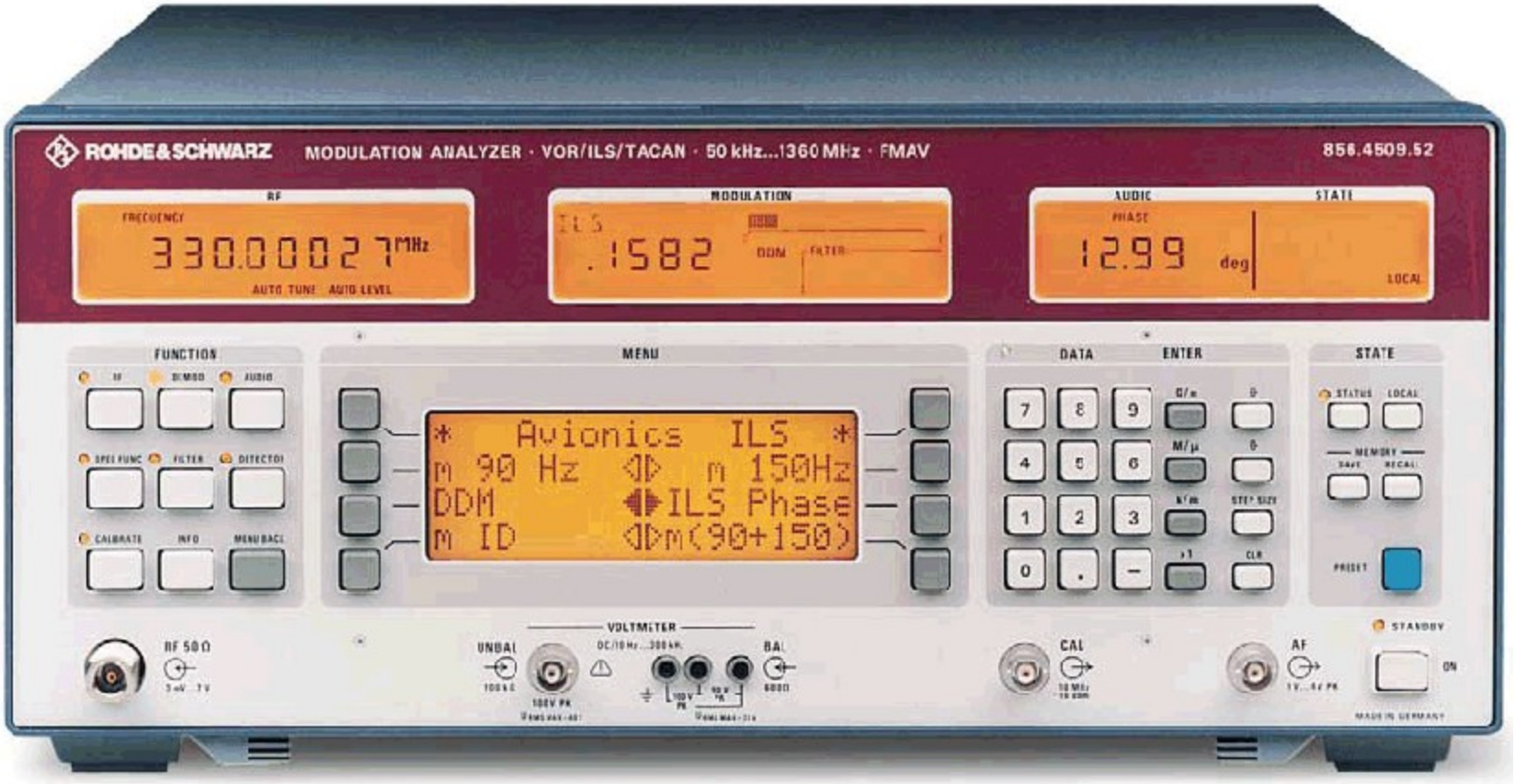

SPECIFICATIONS

Amplitude modulation measurement

Modulation frequency range	10 Hz to 200 kHz
Resolution, Accuracy	0.1% of reading, ±1%

ILS (f_{in} = 10 MHz; 108 to 120 MHz; 328 to 336 MHz)

Amplitude modulation measurement	m = 10% to 90%
Measurement accuracy	
90/150 Hz ±2%	±0.5% of reading
300 Hz to 4 kHz (identifier)	±1.2% of reading
DDM measurement	
Measurement range	0 to ±0.2 DDM
f_{mod}	90/150 Hz ±1%
Measurement accuracy	
m = 18 to 22%	±0.0002 DDM ±0.1% of reading
m = 32 to 48%	±0.0005 DDM ±0.1% of reading
Resolution	≤0.0001 DDM

FM AND PM SPECS

Frequency modulation measurement

Modulation frequency range	10 Hz to 200 kHz		
Max. measurable deviation for f_{in}	50 to 300 kHz	0.3 to 10 MHz	≥10 MHz
	f_{in}/10	150 kHz	700 kHz
Accuracy	±1%		
Resolution	better than 0.1% of reading		
Residual FM for f_{in}, ≤1.36 GHz, CCITT, RMS	≤1 Hz		

Phase modulation measurement

Modulation frequency range	200 Hz to 200 kHz
Max. measurable deviation	
300 kHz to 10 MHz	150 rad
≥10 MHz	700 rad
Accuracy	±2%
Residual φM, f_{in} up to 1.36 GHz, CCITT	≤0.004 rad
Resolution	<0.1% (minimum 0.0001 rad)

CALIBRATOR SPECS

ILS

DDM accuracy m=18 to 22%	≤±0.00005 DDM ±0.001 x (DDM)
DDM accuracy m=32 to 48%	≤±0.0001 DDM ±0.001 x (DDM)
Phase accuracy 90 Hz/150 Hz	≤0.1°

COMPETITOR

HP 8902A

SOME SPECS

Amplitude Modulation

Rates: 20 Hz to 100 kHz
Depths: To 99%
Accuracy: ± 1% of reading ± 1 digit, for rates 50 Hz to 50 kHz and depths ≥ 5%

Frequency Modulation

Rates: 20 Hz to 200 kHz
Deviations: To 400 kHz
Accuracy: ± 1% of reading ± 1 digit, for rates 50 Hz to 100 kHz

Phase Modulation

Rates: 200 Hz to 20 kHz
Deviations: To 400 radians
Accuracy: ± 3% of reading ± 1 digit

AND THE CALIBRATOR

FM Outputs
Frequency Range:
11 to 13.5 MHz, AM FM 4 32 output
88 to 108 MHz, FM 4 4 output
352 to 432 MHz, FM output
Peak Deviation:
>12.5 kHz, 11 to 13.15 MHz carrier
>100 kHz, 88 to 108 MHz carrier
>400 kHz, 352 to 432 MHz carrier
Distortion: <0.025% THD (<–72 dB) for

Flatness: ±0.1%, dc to 100 kHz rates ±0.25%, dc to 200 kHz rates
Stereo Separation (88 to 108 MHz carrier, 75 kHz peak deviation, 1 kHz rate): >60 dB typical

AM Output
Frequency Range (AM/FM ÷ 32 output): 11 to 13.5 MHz
Depth: To 99%
Distortion:
<0.05% THD (<–66 dB), 50% AM, 20 Hz to 100 kHz rates
<0.1% THD (<–60 dB), 95% AM, 20 Hz to 100 kHz rates
Flatness: ±0.1%, 50 Hz to 50 kHz rates; ±0.25%, 20 Hz to 100 kHz rates
Linearity: ±0.1%, <95% AM; ±0.2%, <99%

UNWANTED AM (OR FM?) SEEN WITH A SPECTRUM ANALYZER

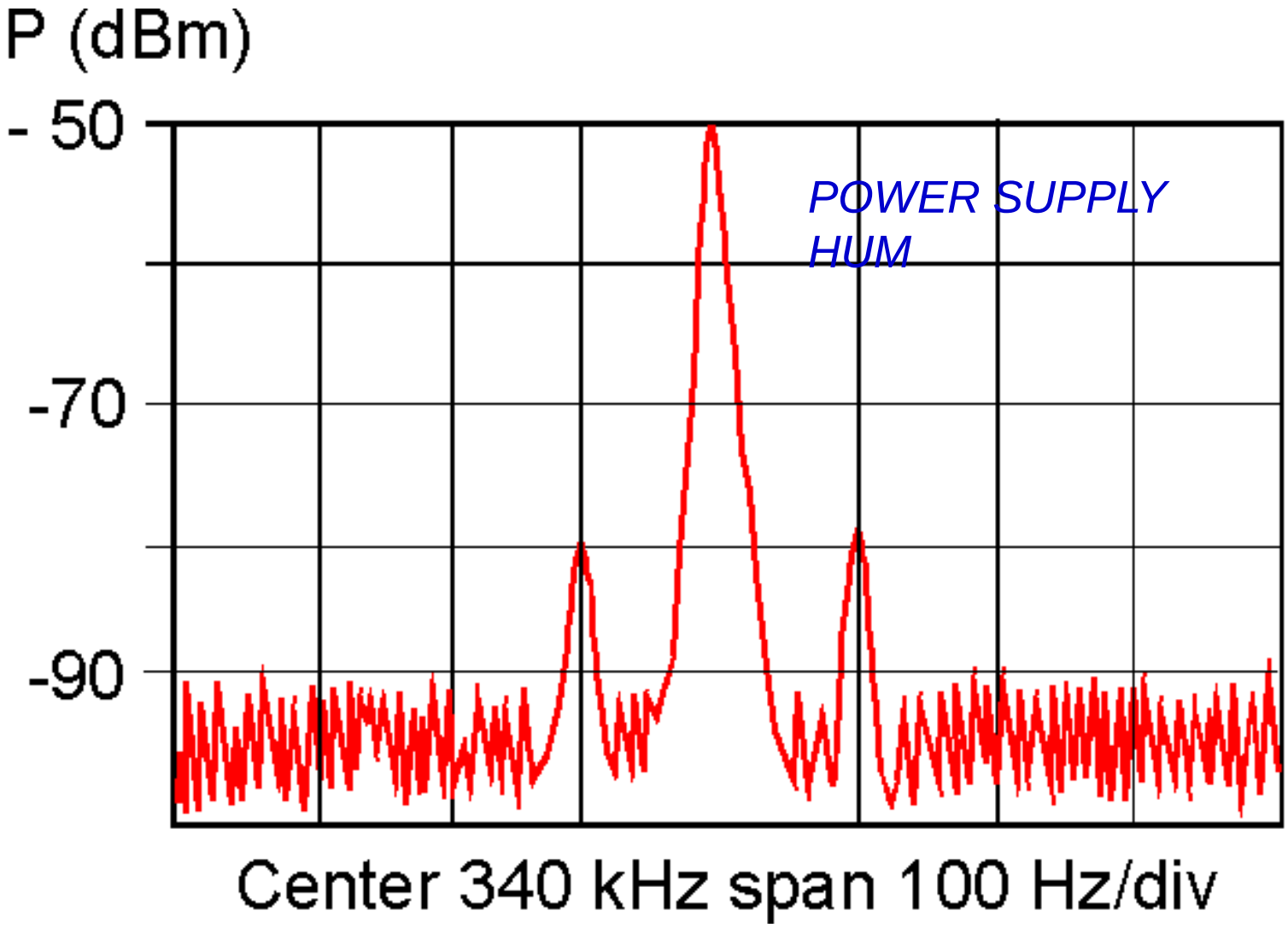

DISCONTINUOUS MODULATIONS

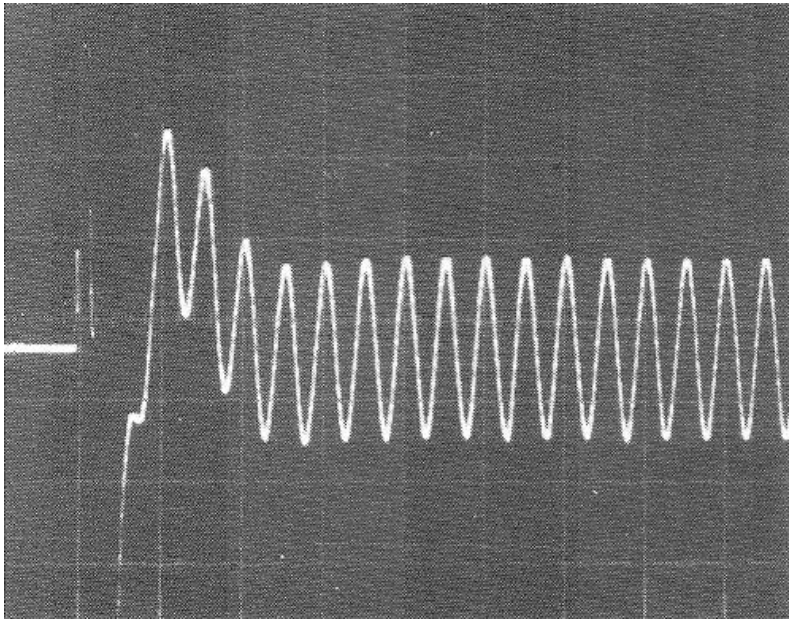

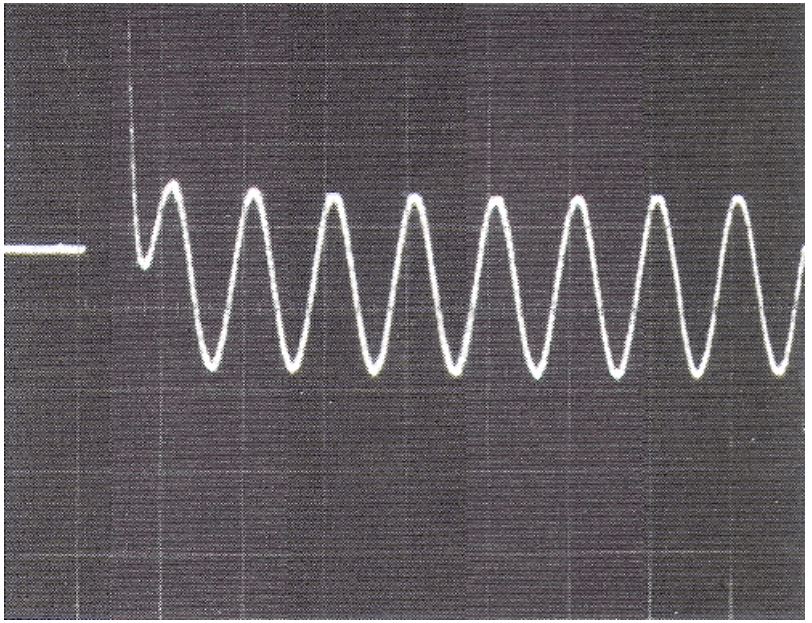

SOME SPEED ENHANCEMENT IS AVAILABLE IF THE MEASURING OR DETECTING DEVICE CAN BE PRE-SET TO THE CONDITIONS TO COME (RIGHT)

MULTI-TONE CROSS MODULATIONS

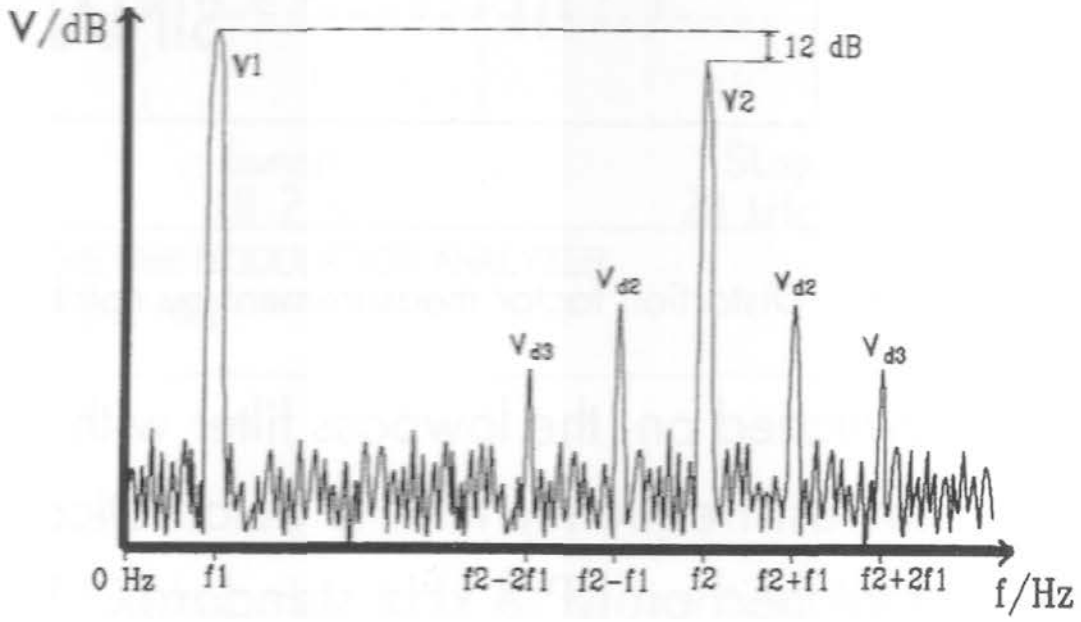

$$d_2 = \frac{v(f_2 + f_1) + v(f_2 - f_1)}{v(f_2)}$$

$$d_3 = \frac{v(f_2 + 2 \cdot f_1) + v(f_2 - 2 \cdot f_1)}{v(f_2)}$$

SEE SEPARATE ARTICLE MODULATION_ANALYZER.PDF FOR FURTHER DISCUSSION

LECTURE SEVEN

SOME SPECIAL MEASUREMENT TASKS

SENSOR SIGNALS

- ACCELERATION
- INCLINATION
- ROTATION

SHOCK EFFECTS ON CRYSTAL A OSCILLATOR

THE RUBBER BAND SET-UP FOR EXPERIMENTAL REDUCTION OF SHOCK AMPLITUDE PLUS G SENSOR

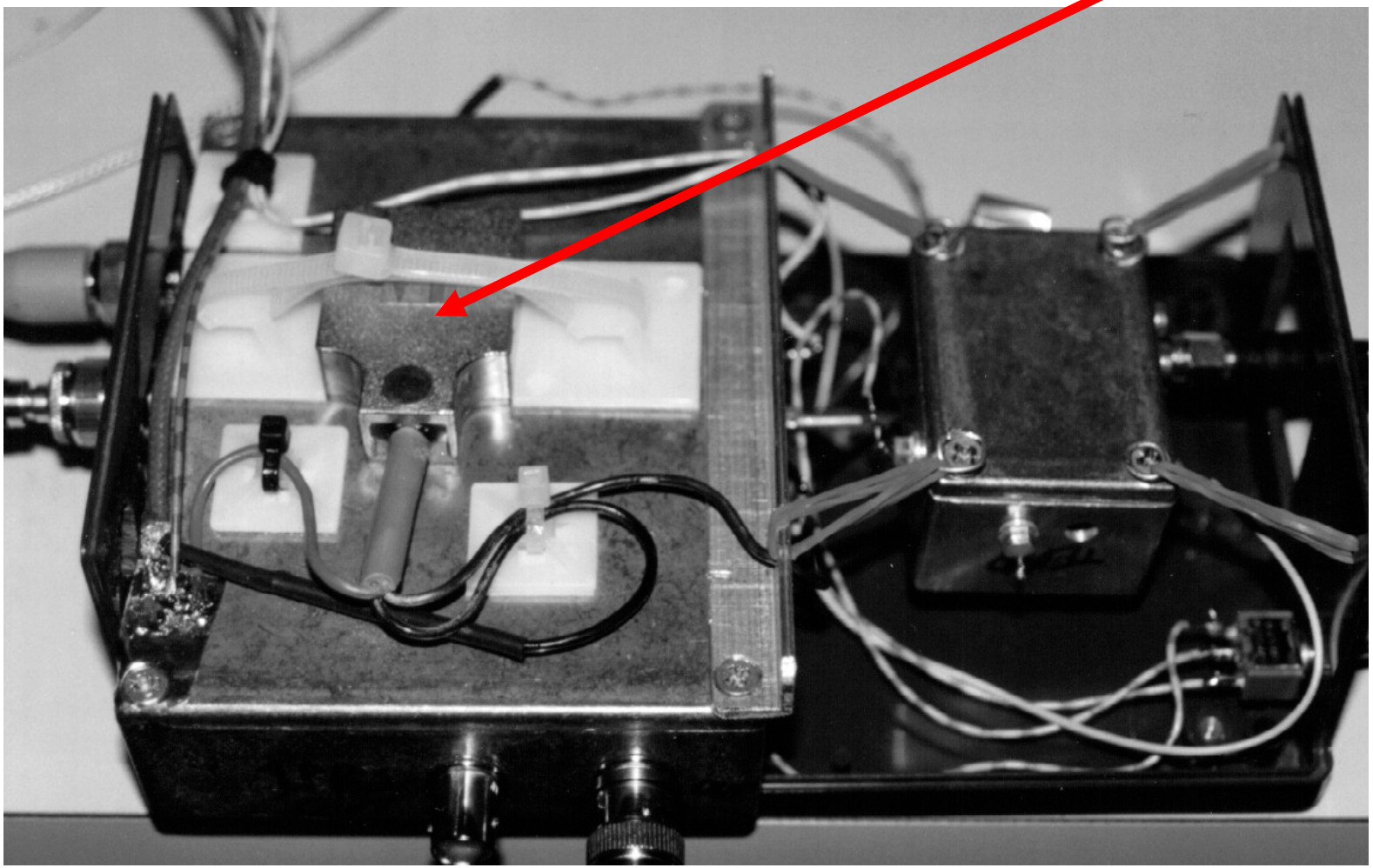

SIMPLE ANGLE MEASUREMENT

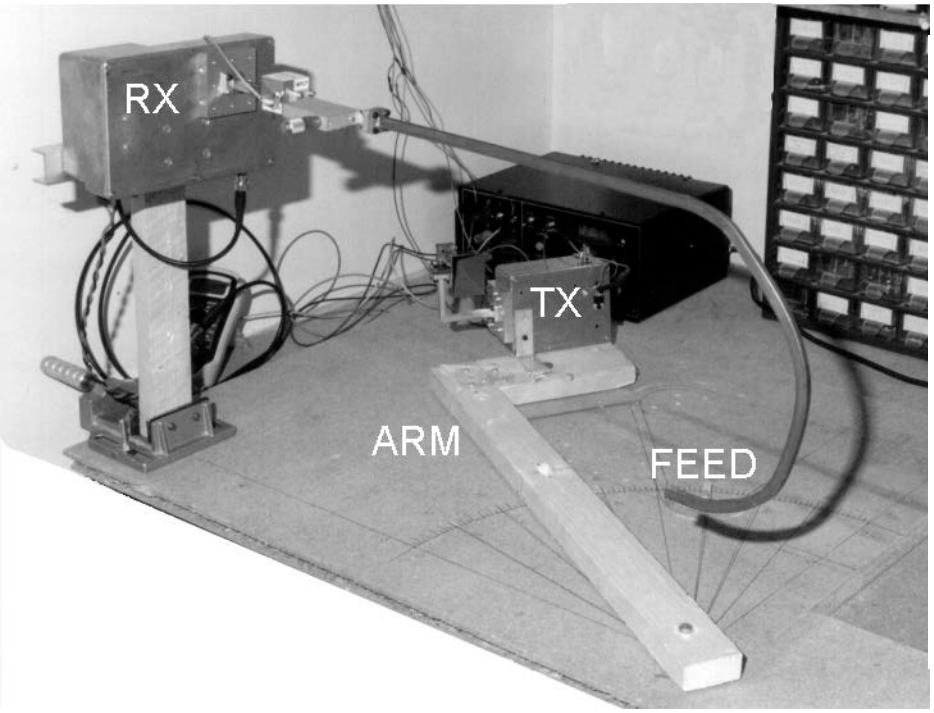

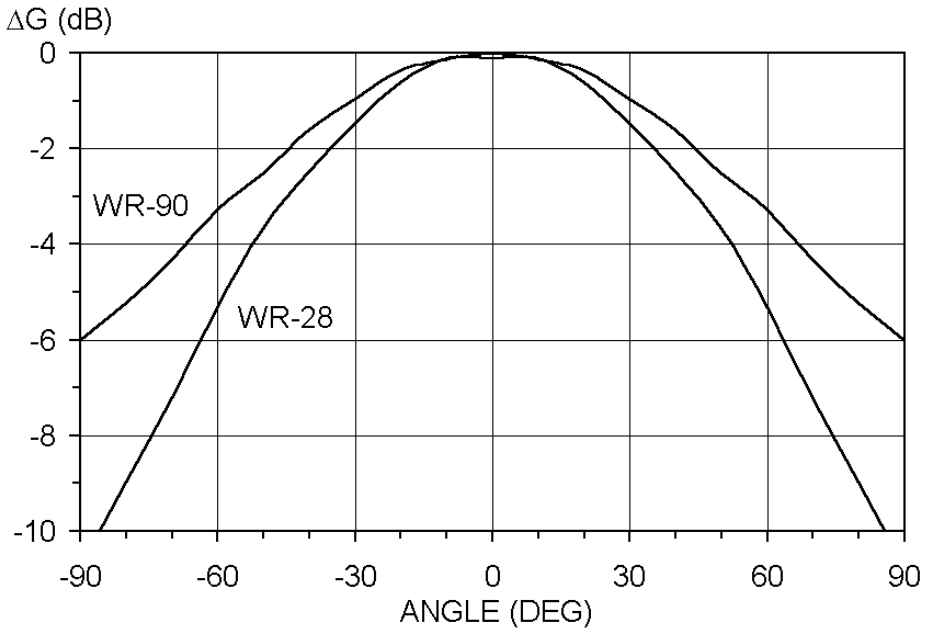

FOR ANTENNA FEED TESTING – JUST WITH A DRAWN SCALE ON PARTICLE BOARD PLUS A POTENTIOMETER ON THE SHAFT CONNECTED TOA COMPUTER-DVM-COMBINATION

OPTICAL PHOTOGRAPHY FOR REFLECTOR QUALITY ANALYSIS

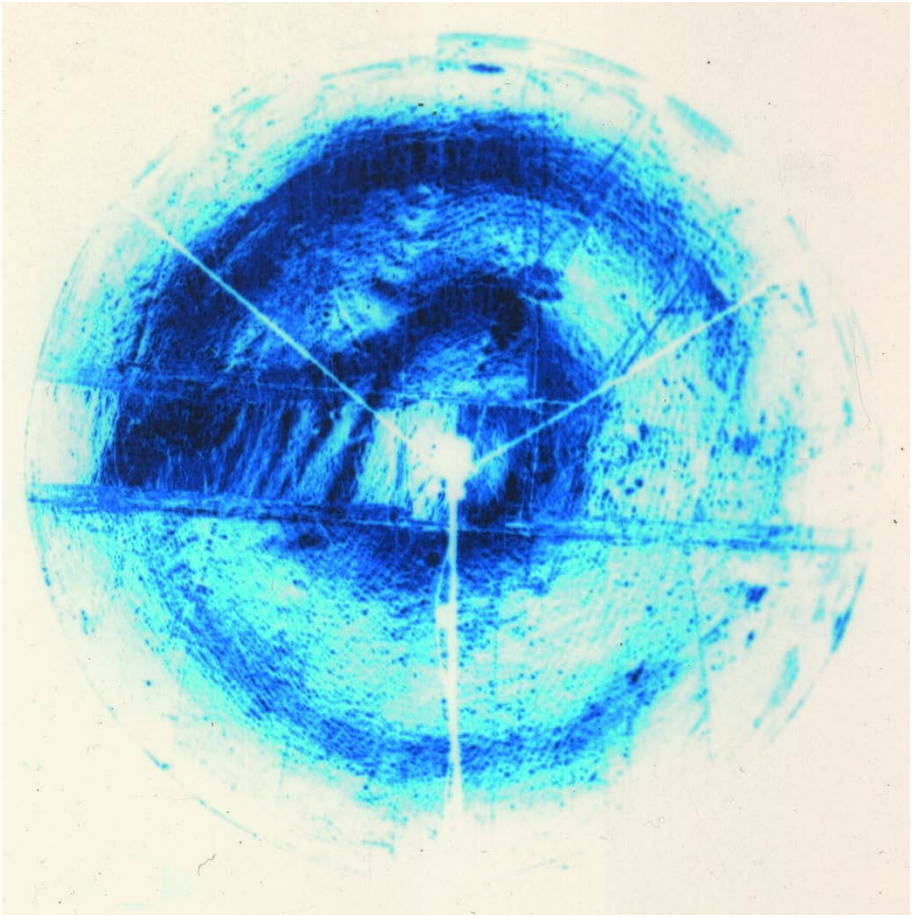

LECTURE EIGHT

COMPUTERIZED MEASUREMENTS

- MOTIVATED BY
  - LENGTHY TESTS
  - MULTIPLE SIMULTANEOUS INSTRUMENTS
  - ADVERSE ON-SITE CONDITIONS
  - POST PROCESSING, STATISTICAL ANALYSING
- DISCOURAGED BY
  - RELIABILITY DURING RUNS
  - EXCESSIVE USELESS DATA SETS
  - PROGRAMMING EFFORT
  - OUT-OF-FOCUS WORK

PC GOES OUTDOORS

SOME ESSENTIALS
(A CONSERVATIVE VIEW)

- FANCY USER INTERFACES DON'T IMPROVE QUALITY OR YIELD
- SAMPLING SPEED MUST FOLLOW THE TIME CONSTANTS OF THE REMAINING PROCESS AND PHENOMENA
- THE ENTIRE PROCESS MUST ALLOW A SOFTWARE COLLAPSE WITHOUT TOTAL LOSS OF ALREADY ACCUMULATED DATA
- RECORDING RESOLUTION IS TYPICALLY EXAGGERATED
- COMPUTERS AND CABLING DESTROY THE REMAINS OF THE LOCAL ELECTROMAGNETIC ENVIRONMENT

WHAT'S GOOD FOR LEARNING MIGHT NOT PROMOTE RESEARCH

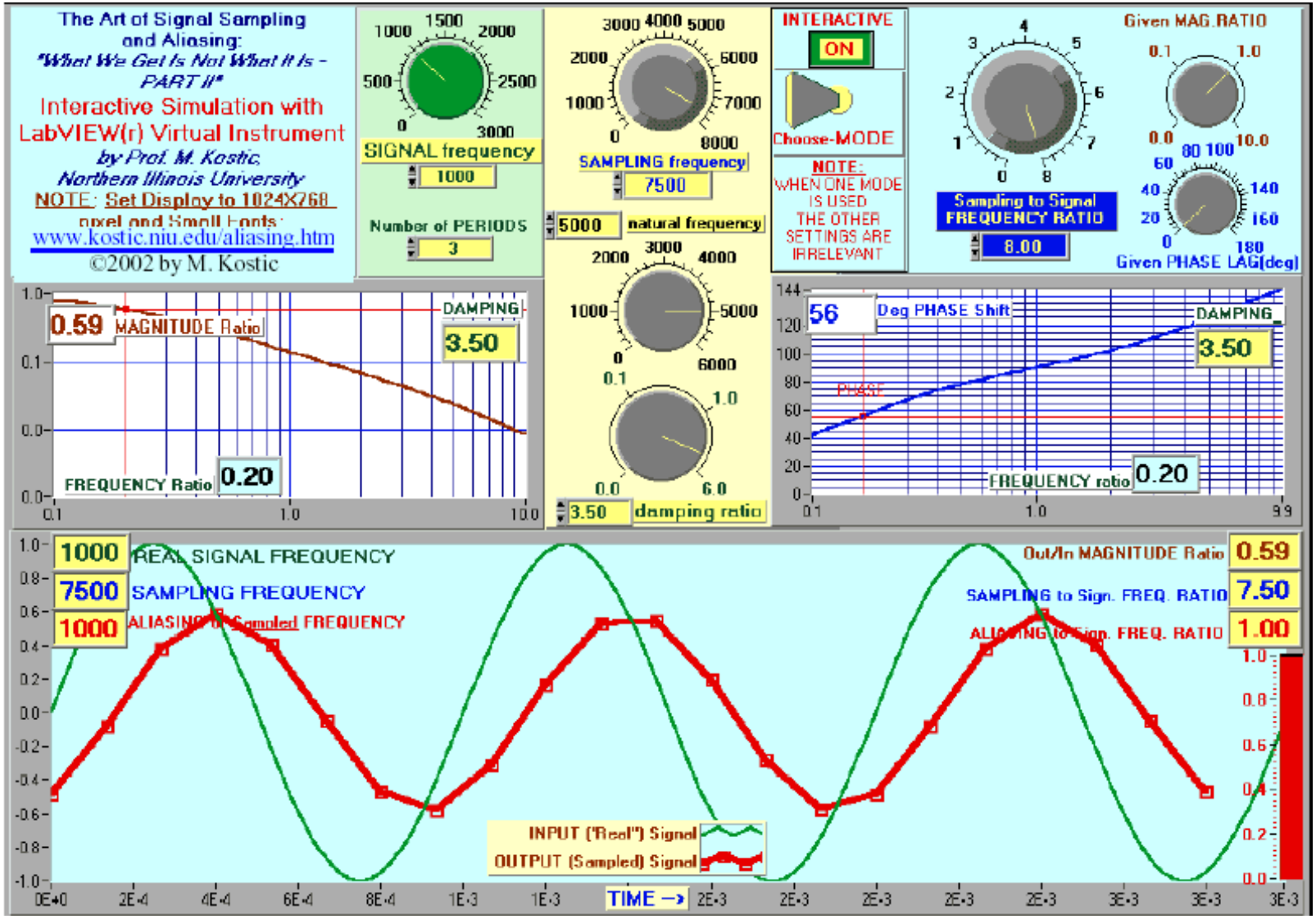

MANY PARAMETERS, MANY SENSORS – CONSIDER COMPUTERIZING

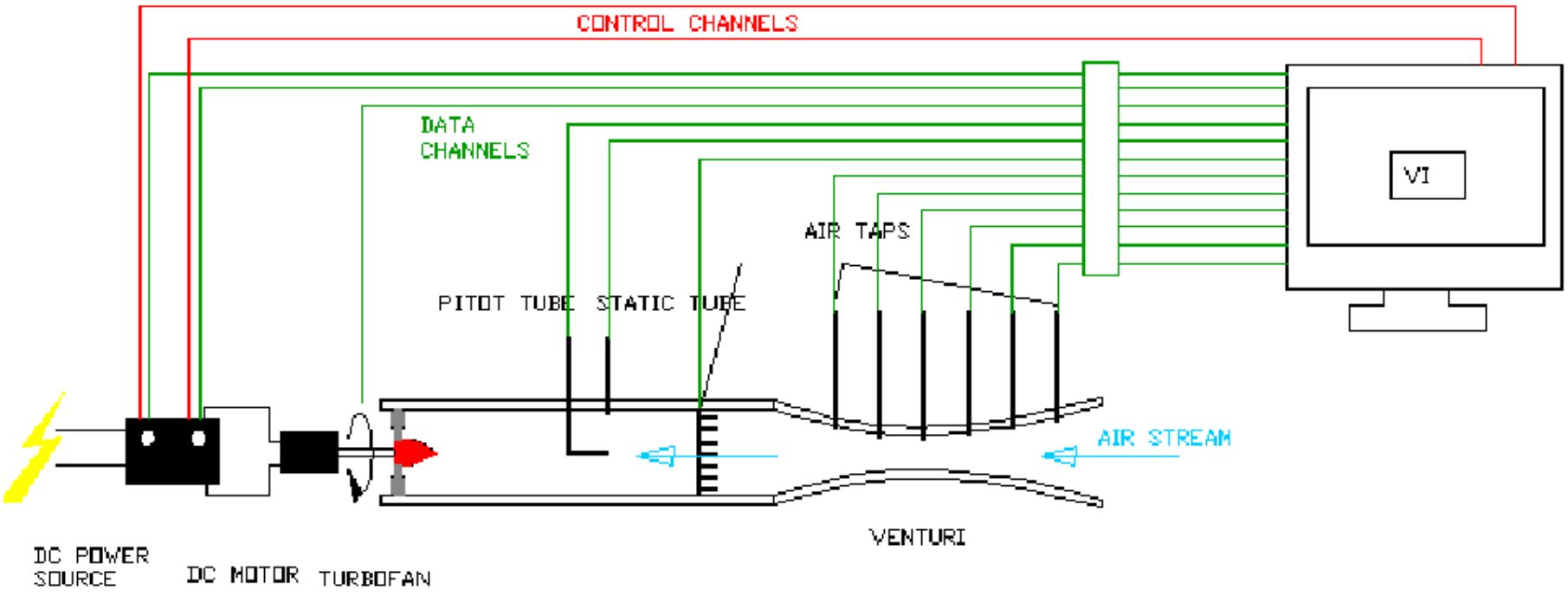

MEANINGLESS DATA AND HARD TO INTERPRET

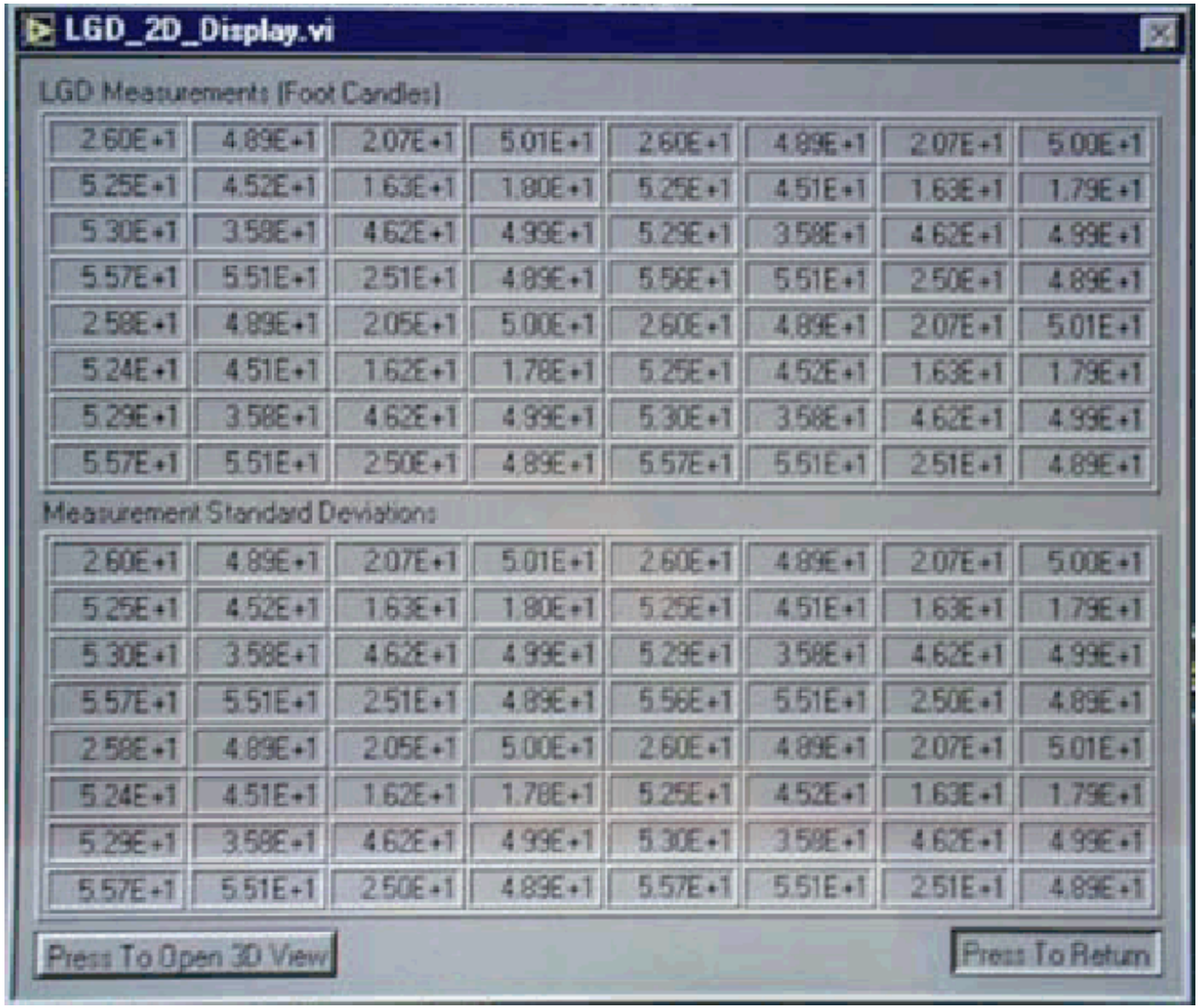

FURTHER NOTES

- MAINS POWER WILL FAIL REPEATEDLY
- THE SYSTEM CLOCK RUNS TOO FAST
- SOFTWARE COMPATIBILITY IS JUST A DEAD PHRASE
- RECOMMENDED COMMAND ABBREVIATIONS DON’T WORK
- THE ORDER OF SETTING COMMANDS IS NOT FREE – CONTRARY TO THE MANUAL
- VITAL SCALING CONSTANTS ARE FORGOTTEN OR GET LOST LATER

AN INTERESTING STORY - VXI

VME e**X**tensions for **I**nstrumentation, ANSI/IEEE Std 1155

-open test and measurement systems

-beginnings in the military/aerospace arena

- •A broad array of products from many vendors
- •Achievement of nice price/performance
- •Industry standards that define an open, integrated hardware and software system environment

Modular VXI products cover instruments, mainframes, fixturing, computers, and system solutions.

SAMPLE EXAM

Answer only four questions !

1. Compare pulse power measurement with a diode detector plus an oscilloscope to the same effort with a heterodyne spectrum analyzer.
2. Sketch a setup that is suitable for measuring fast frequency fluctuations having time spans less than one second.
3. How computerizing could deteriorate measurement quality ?
4. Explain how you can calibrate a meter used to record amplitude modulation.
5. Test equipment master oscillators.
6. What is the difference between oscilloscope sampling rate and waveform update rate ?

THE END